State of California, State Water Resources Control Board
Division of Water Rights
P.O. Box 2000, Sacramento, CA 95812-2000
Info: (916) 341-5300, FAX: (916) 341-5400 Web: http://waterrights.ca.gov

S000831%S%2005

STATE WATER RESOURCES CONTROL BOARD

2003, 2004, 2005

2005 JUL 31 PM 12:41

DIV. OF WATER RIGHTS SACRAMENTO

SUPPLEMENTAL STATEMENT OF WATER DIVERSION AND USE

If the information below is inaccurate, please line it out in red and provide current information.
Notify this office if ownership or address changes occur during the reporting year.

Please Complete and Return This Form by JULY 1, 2005.

If the mail recipient's name, address or phone No. is wrong or missing, please correct.

Owner of Record: PACIFIC GAS AND ELECTRIC COMPANY;

PRIMARY CONTACT OR AGENT FOR MAIL & REPORTING:

PACIFIC GAS AND ELECTRIC COMPANY

PO BOX 770000-N11E
SAN FRANCISCO, CA 94177

STATEMENT NO.: S000831
CONTACT PHONE NO.: (415)973-6960

Source Name: NORTH BATTLE CREEK
Tributary To: BATTLE CREEK
County: Shasta
Year of First Use: 1909
Diversion Within: SW1/4 of NE1/4 Section 15, T31N, R02E, MB&M
Parcel Number:

A. **Water is Used Under:** Riparian claim _____ Pre-1914 right X Other (explain): _____

B. **Year of First Use:** (Please provide if missing above) _____

C. **Amount of Use:** Enter the amount (or the approximate amount) of water used each month, using the table below.

Amounts below are in: Gallons _____ Million Gallons (MG) _____ End of Month Storage Acre-feet (AF) X Other _____

Year	Jan	Feb	Mar	Apr	May	June	July	Aug	Sept	Oct	Nov	Dec	Total Annual
2003	428	207	436	445	445	428	428	420	161	147	147	166	
2004	156	428	436	436	436	428	395	334	235	171	147	134	
2005	191	161	420	428	436	428	372	292	224	130	152	166	

D. **Purpose of Use** – Specify number of acres irrigated, stock watered, persons served, etc.

Irrigation _____ acres; Stockwatering _____; Domestic _____

Other (specify) Electric generation at Volta 1, Volta 2, South, Inskip and Coleman Powerhouses.

E. **Changes in Method of Diversion** – Describe any changes in your project since your previous statement was filed. (New pump, enlarged diversion dam, location of diversion, etc.)

_____

F. Please answer only those questions below which are applicable to your project.

1. Conservation of water
   a. Are you now employing water conservation efforts? YES ___ NO X
   Describe any water conservation efforts you have initiated: _____

   b. If you are claiming credit for water conservation under section 1011 of the Water Code for your claimed pre-1914 appropriative right, please show the amount of water conserved:

   Reduction in Diversions:

   Year _____ _____ (AF/MG) Year _____ _____ (AF/MG) Year _____ _____ (AF/MG)

   Reduction in consumptive use:

   Year _____ _____ (AF/MG) Year _____ _____ (AF/MG) Year _____ _____ (AF/MG)

   I have data to support the above surface water use reductions due to conservation efforts. YES _____ NO _____

2. Water quality and wastewater reclamation

a. Are you now or have you been using reclaimed water from a wastewater treatment facility, desalination facility or water polluted by waste to a degree, which unreasonably affects such water for other beneficial uses? YES ____ NO X.

b. If you are claiming credit due to the substitution of reclaimed water, desalinated water or polluted water in lieu of a claimed pre-1914 appropriative right under section 1010 of the Water Code, please show amounts of reduced diversions and amounts of substitute water supply used:

Amount of reduced diversion:
Year ____ _____ (AF/MG) Year ____ _____ (AF/MG) Year ____ _____ (AF/MG)

State the type of substitute water supply: _____

Amount of substitute water supply used:
Year ____ _____ (AF/MG) Year ____ _____ (AF/MG) Year ____ _____ (AF/MG)

I have data to support the above surface water use reductions due to the use of a substitute water supply. YES ____ NO ____

3. Conjunctive use of surface water and groundwater

a. Are you now using groundwater in lieu of surface water? YES ____ NO X.

b. If you are claiming credit due to the substitution of groundwater for a claimed pre-1914 appropriative right under section 1011.5 of the Water Code, please show the amounts of groundwater used:

Year ____ _____ (AF/MG) Year ____ _____ (AF/MG) Year ____ _____ (AF/MG)

I have data to support the above surface water use reductions due to the use of groundwater. YES ____ NO ____

I understand that it may be necessary to document the water savings claimed in "F" above if credit under Water Code sections 1010 and 1011 is sought in the future.

I declare that the information in this report is true to the best of my knowledge and belief.

DATE: July 25, 20 06 at San Francisco, California

SIGNATURE: J. R. Ray for Randal S. Livingston

PRINTED NAME: J. R. Ray for Randal S. Livingston
(first name) (middle initial) (last name)

COMPANY NAME: Pacific Gas and Electric Company

If there is insufficient space for your answers, please use the space provided below.

ITEM	CONTINUATION

GENERAL INFORMATION PERTAINING TO WATER RIGHTS IN CALIFORNIA

There are two principal types of surface water rights in California. They are riparian and appropriative rights.

A riparian right enables an owner of land bordering a natural lake or stream to take and use water on his riparian land. Riparian land must be in the same watershed as the water source and must never have been severed from the sources of supply by an intervening parcel without reservation of the riparian right to the severed parcel. Generally, a riparian water user must share the water supply with other riparian users. Riparian rights may be used to divert the natural flow of a stream but may not be used to store water for later use or to divert water which originates in a different watershed, water previously stored by others, return flows from use of groundwater, or other "foreign" water to the natural stream system.

An appropriative right is required for use of water on non-riparian land and for storage of water. Generally, appropriative rights may be exercised only when there is a surplus not needed by riparian water users. Since 1914, new appropriators have been required to obtain a permit and license from the State. Appropriative rights can be granted to waters "foreign" to the natural stream system.

Statements of Water Diversion and Use must be filed by riparian and pre-1914 appropriative water users as set forth in Water Code section 5101 with specific exceptions. The filing of a statement (1) provides a record of water use, (2) enables the State to notify such users if someone proposes a new appropriation upstream from their diversions, and (3) assists the State to determine if additional water is available for future appropriators.

The above discussion is provided for general information. For more specific information concerning water rights, please contact an attorney or the Water Office. We have several pamphlets available. They include: (1) Statements of Water Diversion and Use, (2) Information Pertaining to Water Rights in California, and (3) Appropriation of Water in California.

State of California
State Water Resources Control Board
DIVISION OF WATER RIGHTS
P.O. Box 2000, Sacramento, CA 95812-2000
Info: (916) 657-2170, FAX (916) 657-1485, Web: http//www.waterrights.ca.gov

STATE WATER RESOURCES CONTROL BOARD
2001 JUL 23 PM 1:03
DIV OF WATER RIGHTS SACRAMENTO

SUPPLEMENTAL STATEMENT OF WATER DIVERSION AND USE

If the information below is inaccurate, pleae line it out in red and provide current information.
Notify this office if ownership or address changes occur during the coming year.

PLEASE COMPLETE AND RETURN THIS FORM BY JULY 1, 2000

OWNER OF RECORD: PACIFIC GAS AND ELECTRIC COMPANY

PACIFIC GAS AND ELECTRIC COMPANY
C/O MANAGER, HYDRO GENERATION
PO BOX 770000 P10A
SAN FRANCISCO, CA 94177

STATEMENT NO: S 000831

S 0 0 0 8 3 1

SOURCE: NORTH BATTLE CREEK
TRIBUTARY TO: BATTLE CREEK
COUNTY: SHASTA
DIVERSION WITHIN: SW1\4 OF NE1/4 SECTION 15, T31N, R2E, MDB&M.

TELEPHONE NUMBER: (415) 973-4602
YEAR OF FIRST USE: 1909
PARCEL NO:

A. Water is used under: Riparian Claim _____ Pre 1914 right X Other (explain) _____

B. Year of first use (Please provide if missing above) _____

C. Amount of use - Enter the amount of water used each month. If monthly and annual use are not known, check the months in which water was used.

Amounts below are: gallons _____ Acre-feet X Other **End of month storage**

Year	Jan	Feb	Mar	Apr	May	Jun	Jul	Aug	Sep	Oct	Nov	Dec	Total Annual
1994	99.0	266.0	403.0	403.0	395.0	327.0	247.0	186.0	201.0	207.0	166.0	139.0	
1995	299.0	247.0	489.0	489.0	454.0	436.0	420.0	411.0	342.0	279.0	186.0	272.0	
1996	139.0	207.0	428.0	445.0	445.0	436.0	395.0	395.0	253.0	126.0	114.0	526.0	

D. Purpose of use - Specify number of acres irrigated, stock watered, persons served, etc.

Irrigation _____ acres; Stockwatering _____ ; Domestic _____ ;

Other (specify) Electric generation at Volta 1, Volta 2, South, Inskip and Coleman Powerhouses.

E. Changes in method of Diversion - Describe any changes in your project since your previous statement was filed. (New pump, enlarged diversion dam, location of diversion, etc.)

_____

F. Please answer only those questions below which are applicable to your project.

1. Conservation of water
   a. Are you now employing water conservation efforts? YES ____ NO ____
   Describe any water conservation efforts you have initiated: _____

   b. If credit toward beneficial use of water under claimed pre 1914 appropriative water right for water not used due to a conservation effort is claimed under section 1011 of the Water Code, pleae show the amounts of water conserved.

   Reduction in diversions:

   19____ _____ (af/mg) 19 ____ _____ (af/mg) 19 ____ _____ (af/mg)

   Reduction in consumptive use:

   19____ _____ (af/mg) 19 ____ _____ (af/mg) 19 ____ _____ (af/mg)

   I have data to support the above surface water use reductions due to conservation efforts. YES ____ NO ____

2. Water Quality and wastewater reclamation

   a. Are you now or have you been using reclaimed water from a wastewater treatment facility or water polluted by waste to a degree which unreasonably affects such water for other beneficial uses? YES ____ NO ____

   b. If credit toward use under a claimed pre 1914 appropriative water right throught substitution of reclaimed water, desalinated water or polluted water in lieu of appropriated water is claimed under section 1010 of the water Code, please show amounts of reduced diversions and amounts of reclaimed water used:

   19____ _____ (af/mg) 19 _____ _____ (af/mg) 19 _____ _____ (af/mg)
   I have data to support the above surface water use reductions due to wastewater reclamation. YES ____ NO ____

3. Conjunctive use of surface water and groundwater

   a. Are you now using groundwater in lieu of surface water? YES ____ NO ____.

   b. If credit toward use under a claimed pre 1914 appropriative water right throught substitution of groundwater in lieu of appropriated wate is claimed under section 1011.5 of the Water code, please show the amounts of groundwater used:

   19____ _____ (af/mg) 19 _____ _____ (af/mg) 19 _____ _____ (af/mg)
   I have data to support the above surface water use reductions due to conjunctive use efforts. YES ____ NO ____

I understand that it may be necessary to document the watr savings claimed in "F" above if credit under Water Code sections 1010 and 1011 is sought in the future.

I declare that the information in this report is true to the best of my knowledge and belief.

DATE: JUL 19 2001 , 20 01 at San Francisco , California

SIGNATURE: Randal S. Livingston JRR

PRINTED NAME: Randal (first name) S. (middle init.) Livingston (last name)

COMPANY NAME: PACIFIC GAS AND ELECTRIC COMPANY

If there is insufficient space for your answers, please use the space provided below.

ITEM	CONTINUATION

GENERAL INFORMATION PERTAINING TO WATER RIGHTS IN CALIFORNIA

There are two principal types of surface water rights in California. They are riparian and appropriative rights.

A riparian right enables an owner of land bordering a natural lake or stream to take and use water on his riparian land. Riparian land must be in the same watershed as the water source and must never have been severed from the sources of supply by an intervening parcel without reservation of the riparian right to the severed parcel. Generally, a riparian water user must share the water supply with other riparian users. Riparian rights may be used to divert the natural flow of a stream but may not be used to store water for later use or divert water which originates in a different watershed, water previously stored by others, return flows from use of grondwater, or other "foreign" water to the natural stream system.

An appropriate right is required for use of water on nonriparian land and for storage of water. Generally, appropriative rights may be exercised only when there is a surplus not needed by riparian water users. Since 1914, new appropriators have been required to obtain a permit and license from the State. Appropriate rights can be granted to waters "foreign" to the natural stream system.

Statements of Water Diversion and Use must be filed by riparian and pre-1914 appropriative water users as set forth in Water Code section 5100 with specific exceptions. The filing of a statement (1) provides a record of water use, (2) enables the State to notify such users if someone proposes a new appropriation upstream from their diversions, and (3) assists the State to determine if additional water is available for future appropriators.

The above discussion is provided for general information. For more specific information concerning water rights, please contact an attorney or write to this office. We have several pamphlets available. They include: (1) Statements of Wate Diversion and Use, (2) Information Pertaining to Water Rights in California, and (3) Appropriation of Water in California.

State of California
State Water Resources Control Board
DIVISION OF WATER RIGHTS
P.O. Box 2000, Sacramento, CA 95812-2000
Info: (916) 657-2170, FAX (916) 657-1485, Web: http//www.waterrights.ca.gov

STATE WATER RESOURCES CONTROL BOARD
2001 JUL 2 PM 2:46
DIVISION OF WATER RIGHTS SACRAMENTO

SUPPLEMENTAL STATEMENT OF WATER DIVERSION AND USE

If the information below is inaccurate, pleae line it out in red and provide current information.
Notify this office if ownership or address changes occur during the coming year.

PLEASE COMPLETE AND RETURN THIS FORM BY JULY 1, 2000

OWNER OF RECORD: PACIFIC GAS AND ELECTRIC COMPANY

PACIFIC GAS AND ELECTRIC COMPANY
C/O MANAGER, HYDRO GENERATION
PO BOX 770000 P10A
SAN FRANCISCO, CA 94177

STATEMENT NO: S 000831

S 0 0 0 8 3 1

SOURCE: NORTH BATTLE CREEK
TRIBUTARY TO: BATTLE CREEK
COUNTY: SHASTA
DIVERSION WITHIN: SW1\4 OF NE1/4 SECTION 15, T31N, R2E, MDB&M.

TELEPHONE NUMBER: (415) 973-4602
YEAR OF FIRST USE: 1909
PARCEL NO:

A. Water is used under: Riparian Claim _____ Pre 1914 right X Other (explain) _____

B. Year of first use (Please provide if missing above) _____

C. Amount of use - Enter the amount of water used each month. If monthly and annual use are not known, check the months in which water was used.

Amounts below are: gallons _____ Acre-feet X Other **End of month storage**

Year	Jan	Feb	Mar	Apr	May	Jun	Jul	Aug	Sep	Oct	Nov	Dec	Total Annual
1997	436	166	428	428	436	436	436	436	349	229	110	96	
1998	436	143	436	445	445	428	436	436	420	299	191	110	
1999	207	428	436	436	436	436	436	436	122	181	108	107	

D. Purpose of use - Specify number of acres irrigated, stock watered, persons served, etc.

Irrigation _____ acres; Stockwatering _____ ; Domestic _____ ;

Other (specify) Electric generation at Volta 1, Volta 2, South, Inskip and Coleman Powerhouses.

E. Changes in method of Diversion - Describe any changes in your project since your previous statement was filed. (New pump, enlarged diversion dam, location of diversion, etc.)

F. Please answer only those questions below which are applicable to your project.

1. Conservation of water
   a. Are you now employing water conservation efforts? YES ____ NO ____
   Describe any water conservation efforts you have initiated: _____

   b. If credit toward beneficial use of water under claimed pre 1914 appropriative water right for water not used due to a conservation effort is claimed under section 1011 of the Water Code, pleae show the amounts of water conserved.

   Reduction in diversions:

   19____ _____ (af/mg) 19 ____ _____ (af/mg) 19 ____ _____ (af/mg)

   Reduction in consumptive use:

   19____ _____ (af/mg) 19 ____ _____ (af/mg) 19 ____ _____ (af/mg)

   I have data to support the above surface water use reductions due to conservation efforts. YES ____ NO ____

2. Water Quality and wastewater reclamation

   a. Are you now or have you been using reclaimed water from a wastewater treatment facility or water polluted by waste to a degree which unreasonably affects such water for other beneficial uses? YES ____ NO ____

   b. If credit toward use under a claimed pre 1914 appropriative water right throught substitution of reclaimed water, desalinated water or polluted water in lieu of appropriated water is claimed under section 1010 of the water Code, please show amounts of reduced diversions and amounts of reclaimed water used:

   19____ _____ (af/mg) 19 _____ _____ (af/mg) 19 _____ _____ (af/mg)
   I have data to support the above surface water use reductions due to wastewater reclamation. YES ____ NO ____

3. Conjunctive use of surface water and groundwater

   a. Are you now using groundwater in lieu of surface water? YES ____ NO ____.

   b. If credit toward use under a claimed pre 1914 appropriative water right throught substitution of groundwater in lieu of appropriated wate is claimed under section 1011.5 of the Water code, please show the amounts of groundwater used:

   19____ _____ (af/mg) 19 _____ _____ (af/mg) 19 _____ _____ (af/mg)
   I have data to support the above surface water use reductions due to conjunctive use efforts. YES ____ NO ____

I understand that it may be necessary to document the watr savings claimed in "F" above if credit under Water Code sections 1010 and 1011 is sought in the future.

I declare that the information in this report is true to the best of my knowledge and belief.

DATE: JUL 19 2001 , 20 01 at San Francisco , California

SIGNATURE: Randal S. Livingston JRR

PRINTED NAME: Randal (first name) S. (middle init.) Livingston (last name)

COMPANY NAME: PACIFIC GAS AND ELECTRIC COMPANY

If there is insufficient space for your answers, please use the space provided below.

ITEM	CONTINUATION

GENERAL INFORMATION PERTAINING TO WATER RIGHTS IN CALIFORNIA

There are two principal types of surface water rights in California. They are riparian and appropriative rights.

A riparian right enables an owner of land bordering a natural lake or stream to take and use water on his riparian land. Riparian land must be in the same watershed as the water source and must never have been severed from the sources of supply by an intervening parcel without reservation of the riparian right to the severed parcel. Generally, a riparian water user must share the water supply with other riparian users. Riparian rights may be used to divert the natural flow of a stream but may not be used to store water for later use or divert water which originates in a different watershed, water previously stored by others, return flows from use of grondwater, or other "foreign" water to the natural stream system.

An appropriate right is required for use of water on nonriparian land and for storage of water. Generally, appropriative rights may be exercised only when there is a surplus not needed by riparian water users. Since 1914, new appropriators have been required to obtain a permit and license from the State. Appropriate rights can be granted to waters "foreign" to the natural stream system.

Statements of Water Diversion and Use must be filed by riparian and pre-1914 appropriative water users as set forth in Water Code section 5100 with specific exceptions. The filing of a statement (1) provides a record of water use, (2) enables the State to notify such users if someone proposes a new appropriation upstream from their diversions, and (3) assists the State to determine if additional water is available for future appropriators.

The above discussion is provided for general information. For more specific information concerning water rights, please contact an attorney or write to this office. We have several pamphlets available. They include: (1) Statements of Wate Diversion and Use, (2) Information Pertaining to Water Rights in California, and (3) Appropriation of Water in California.

State of California, State Water Resources Control Board
Division of Water Rights, P.O. Box 2000, Sacramento, CA 95812-2000
Info: (916) 341-5300, FAX: (916) 341-5400, Web: http://www.waterrights.ca.gov

S000831%S%2002

SUPPLEMENTAL STATEMENT OF WATER DIVERSION AND USE

2000, 2001, 2002

If the information below is inaccurate, please line it out in red and provide current information.
Notify this office if ownership or address changes occur during the coming year.

Please Complete and Return This Form by September 1, 2003.
***If the mail recipient's name, address or phone No. is wrong or missing, please correct.**

Owner of Record: PACIFIC GAS AND ELECTRIC COMPANY;

STATEMENT NO.: S000831
CONTACT PHONE NO.: (415)973-6950

PRIMARY CONTACT OR AGENT FOR MAIL & REPORTING:
PACIFIC GAS AND ELECTRIC COMPANY
C/O LEAD DIRECTOR, POWER GENERATION
PO BOX 770000 N11E
SAN FRANCISCO, CA 94177

FOR ONLINE REPORTING AT
www.waterrights.ca.gov

USER NAME: S000831
PASSWORD: D00067

Source Name: NORTH BATTLE CREEK
Tributary To: BATTLE CREEK
County: Shasta
Diversion Within: SW1/4 of NE1/4 Section 15, T31N, R02E, MB&M

Year of First Use: 1909
Parcel Number:

A. Water is used under: Riparian claim _____ Pre 1914 right X Other (explain); _____

B. Year of first use (Please provide if missing above) _____

C. Amount of Use – Enter the amount (or the approximate amount) of water used each month.

Amounts below are: Gallons _____ Acre-feet X Other End of month storage

Year	Jan	Feb	Mar	Apr	May	June	July	Aug	Sept	Oct	Nov	Dec	Total Annual
2000	NR	NR	NR	NR	NR	NR	NR	NR	NR	196	156	96	
2001	110	147	436	436	428	428	395	356	266	253	235	191	
2002	139	327	436	436	428	403	299	299	156	122	126	299	

D. Purpose of Use - Specify number of acres irrigated, stock watered, persons served, etc.

Irrigation _____ acres; Stockwatering _____ ; Domestic _____ ;
Other (specify) Electric generation at Volta 1, Volta 2, South, Inskip and Coleman Powerhouses.

E. Changes in Method of Diversion – Describe any changes in your project since your previous statement was filed. (New pump, enlarged diversion dam, location of diversion, etc.)

F. Please answer only those questions below which are applicable to your project.

1. Conservation of water
   a. Are you now employing water conservation efforts? YES ___ NO ___
   Describe any water conservation efforts you have initiated: _____

   b. If credit toward beneficial use of water under claimed pre 1914 appropriative water right for water not used due to a conservation effort is claimed under section 1011 of the Water Code, please show the amounts of water conserved:

   Reductions in Diversions:

   yr_____ _____ (af/mg) yr_____ _____ (af/mg) yr_____ _____ (af/mg)

   Reductions in consumptive use:

   yr_____ _____ (af/mg) yr_____ _____ (af/mg) yr_____ _____ (af/mg)

   I have data to support the above surface water use reductions due to conservation efforts. YES ___ NO ___

2. Water quality and wastewater reclamation

   a. Are you now or have you been using reclaimed water from a wastewater treatment facility, desalination facility or water polluted by waste to a degree which unreasonably affects such water for other beneficial uses? YES _____ NO _____.

   b. If credit toward use under a claimed pre 1914 appropriative water right through substitution of reclaimed water, desalinated water or polluted water in lieu of appropriated water is claimed under section 1010 of the Water Code, please show amounts of reduced diversions and amounts of reclaimed water used:

   yr_____ _____ (af/mg) yr_____ _____ (af/mg) yr_____ _____ (af/mg)
   I have data to support the above surface water use reductions due to wastewater reclamation. YES ___ NO ___

3. Conjunctive use of surface water and groundwater

   a. Are you now using groundwater in lieu of surface water? YES _____ NO _____.

   b. If credit toward use under a claimed pre 1914 appropriative right through substitution of groundwater in lieu of appropriated water is claimed under section 1011.5 of the Water Code, please show the amounts of groundwater used:

   yr_____ _____ (af/mg) yr_____ _____ (af/mg) yr_____ _____ (af/mg)
   I have data to support the above surface water use reductions due to conjunctive use efforts. YES ___ NO ___

I understand that it may be necessary to document the water savings claimed in "F." above if credit under Water Code sections 1010 and 1011 is sought in the future.

I declare that the information in this report is true to the best of my knowledge and belief.

DATE: January 5, 20 04 at San Francisco, California

SIGNATURE: J R Ray for Randal S. Livingston

PRINTED NAME: Randal (first name) S. (middle init.) Livingston (last name)

COMPANY NAME: PACIFIC GAS AND ELECTRIC COMPANY

If there is insufficient space for your answers, please use the space provided below.

ITEM	CONTINUATION

GENERAL INFORMATION PERTAINING TO WATER RIGHTS IN CALIFORNIA

There are two principal types of surface water rights in California. They are riparian and appropriative rights.

A riparian right enables an owner of land bordering a natural lake or stream to take and use water on his riparian land. Riparian land must be in the same watershed as the water source and must never have been severed from the sources of supply by an intervening parcel without reservation of the riparian right to the severed parcel. Generally, a riparian water user must share the water supply with other riparian users. Riparian rights may be used to divert the natural flow of a stream but may not be used to store water for later use or divert water which originates in a different watershed, water previously stored by others, return flows from use of groundwater, or other "foreign" water to the natural stream system.

An appropriative right is required for use of water on nonriparian land and for storage of water. Generally, appropriative rights may be exercised only when there is a surplus not needed by riparian water users. Since 1914, new appropriators have been required to obtain a permit and license from the State. Appropriate rights can be granted to waters "foreign" to the natural stream system.

Statements of Water Diversion and Use must be filed by riparian and pre 1914 appropriative water users as set forth in Water Code section 5100 with specific exceptions. The filing of a statement (1) provides a record of water use, (2) enables the State to notify such users if someone proposes a new appropriation upstream from their diversions, and (3) assists the State to determine if additional water is available for future appropriators.

The above discussion is provided for general information. For more specific information concerning water rights, please contact an attorney or write to this office. We have several pamphlets available. They include: (1) Statements of Water Diversion and Use, (2) Information Pertaining to Water Rights in California, and (3) Appropriation of Water in California.

"The energy challenge facing California is real. Every California needs to take immediate action to reduce energy consumption. For a list of simple ways you can reduce demand and cut your energy costs, see our Web-site at http://www.swrcb.ca.gov"

S-831

** PLEASE COMPLETE, SUBMIT THE ORIGINAL AND MAKE A COPY FOR YOUR RECORDS ***

STATE WATER RESOURCES CONTROL BOARD
DIVISION OF WATER RIGHTS

P.O. BOX 2000 SACRAMENTO, CA 95812-2000

SUPPLEMENTAL STATEMENT OF WATER DIVERSION AND USE

STATEMENT NO: S000831
OWNER OF RECORD: PACIFIC GAS AND ELECTRIC COMPANY

PACIFIC GAS AND ELECTRIC COMPANY
C/O MANAGER, HYDRO GENERATION
PO BOX 770000 P10A
SAN FRANCISCO, CA 94177

SOURCE: NORTH BATTLE CREEK
TRIBUTARY TO: BATTLE CREEK
COUNTY: SHASTA
DIVERSION WITHIN: SW1\4 OF NE1/4 SECTION 15, T31N, R2E, MDB&M.

TELEPHONE NUMBER: (415) 973-4603
YEAR OF FIRST USE: 1909
PARCEL NO:

(If any of the above information is inaccurate or missing, please correct. Notify this office if ownership or address changes occur during the coming year.)

COMPLETE AND RETURN THIS FORM BY JULY 1, 1995 .

A. Water is used under: Riparian Claim _____; Pre 1914 right __x__; Other (explain) _____

B. Year of first use (Please provide if missing above) _____.

C. Amount of use - Enter the amount of water used each month. If monthly and annual use are not known, check the months in which water was used.

Amounts below are: ☐ Gallons ☒ Acre-feet ☐ (other) _____
End of month storage in Macumber Reservoir

	JAN.	FEB.	MAR.	APR.	MAY	JUNE	JULY	AUG.	SEP.	OCT.	NOV.	DEC.	TOTAL ANNUAL
1992	134	299	403	411	327	229	143	61	63	114	212	247	---
1993	126	89	445	445	462	428	411	372	224	306	134	110	---
1994	99	266	403	403	395	327	247	186	201	207	166	139	---

D. Purpose of use - Specify number of acres irrigated, stock watered, persons served, etc.
Irrigation _____ acres; stock watering _____; Domestic _____
Other (specify) Generation at Volta 1, Volta 2, South, Inskip, & Coleman Powerhoses

*** CONTINUE ON BACK PAGE ***

**** PLEASE COMPLETE, SUBMIT THE ORIGINAL AND MAKE A COPY FOR YOUR RECORDS *****

E. Changes in method of Diversion - Describe any changes in your project since your previous statement was filed. (New pump, enlarged diversion dam, location of diversion, etc.)

F. If part of the water listed in Part C consists of reclaimed or polluted water, please indicate the annual amounts of reclaimed or polluted water in the space below.

I declare under penalty of perjury that the information in this report is true to the best of my knowledge and belief.

DATED: SEP 26 1996 _____, at San Francisco, California

SIGNATURE: Jeffrey D. Butler by JKR

PRINTED NAME: Jeffrey (FIRST NAME) D. (M. NAME) Butler (LAST NAME)

COMPANY NAME: PACIFIC GAS AND ELECTRIC COMPANY

GENERAL INFORMATION PERTAINING TO WATER RIGHTS IN CALIFORNIA

There are two principal types of surface water rights in California. They are riparian and appropriative rights.

A riparian right enables an owner of land bordering a natural lake or stream to take and use water on his riparian land. Riparian land must be in the same watershed as the water source and must never have been severed from the sources of supply by an intervening parcel without reservation of the riparian right to the severed parcel. Generally, a riparian water user must share the water supply with other riparian users. Riparian rights may be used to divert the natural flow of a stream but may not be used to store water for later use or to divert water which originates in a different watershed, or return flows from use of groundwater.

An appropriate right is required for use of water on nonriparian land and for storage of water. Generally, appropriative rights may be exercised only when there is a surplus not needed by riparian water users. Since 1914 new appropriators have been required to obtain a permit and license from the State.

Statements of Water Diversion and Use must be filed by riparian and pre-1914 appropriative water users. The filing of a statement (1) provides a record of water use, (2) enables the State to notify such users if someone proposes a new appropriation upstream from their diversion, and (3) assists the State to determine if additional water is available for future appropriations.

The above discussion is provided for general information. For more specific information concerning water rights, please contact an attorney or write to this office. We have several pamphlets available. They include:

Statements of Water Diversion and Use
Information Pertaining to Water Rights in California
Water Rights for Stockponds Constructed Prior to 1969"
Appropriation of Water in California

Record Searchlight
7-88

Finance, D-2-3
Classified, D-6-12

D

Fish die at lake, hatchery

Thousands killed by heat, water loss

By MARK DeSIO

SHINGLETOWN — Foul play may have caused about 9,000 fish to die, while excessive heat is being blamed for the death of about 300,000 other fish at nearby Lake McCumber.

Pacific Gas and Electric Co. officials said Monday they still don't know why water the company furnishes to a private fish hatchery in Shingletown nearly dried up Friday, killing about 9,000 fish.

John Sandhofner, PG&E hydro superintendent, said Monday that water running from Milseat Creek to the fish hatchery — owned by California Fish Growers of Bodega Bay — nearly went dry for several hours.

The water later filled back up, Sandhofner said, and was at normal levels Saturday.

Foul play is suspected because two locks had been cut from gates near the hatchery, he said.

"We have yet to determine what the problem was," Sandhofner said. "We do know that somebody opened up a side gate and prevented water from going into the creek."

More than 300,000 fish, mostly brown trout, died Friday at Lake McCumber, located about five miles east of Shingletown. Hot water temperatures and low water levels are blamed for the incident.

Don Weidlein, state Department of Fish and Game (DFG) biologist, said water in the lake soared to about 90 degrees. Ideal water temperature for trout is about 70 degrees, he said.

"I personally can't recall another situation like this," Weidlein said, who has been with the department for 31 years. "The oxygen levels in the lake were extremely low."

Weidlein said the unsuitable water conditions killed fish ranging from 3-inch fingerlings to 5-pound brown trout.

No restrictions have been placed on fishing at the lake because of the incident, he said.

To prevent more fish from dying, DFG officials are releasing an additional 2 cubic feet of water per second from Battle Creek into the lake. The DFG said the fish are being left to decompose naturally.

By Saturday, the water temperatures had cooled significantly and no other fish reportedly died from bad water conditions, Weidlein said.

"We are going to keep releasing water into the lake for a couple more days," he said. "We will evaluate things then and see if more changes need to be made."

Weidlein said the department has no plans to restock the lake with trout, saying, "the conditions are just too bad."

Assistance from PG&E and the Federal Energy Regulatory Commission was needed to release water into the lake, Weidlein said.

"We received good cooperation from both agencies," he said. "They really helped us out."

Officials from the private fish hatchery in Shingletown said they raise fish to sell for human consumption.

A manager at the hatchery, who declined to give his name, said the fish that died were salmon.

The manager said he scooped the fish from the water and buried them.

Sandhofner said water temporarily was diverted from the hatchery again Saturday, but it did not cause any problems with the hatchery.

"Somebody is tampering with the water," Sandhofner said. "If they are diverting it for agricultural purposes, they have to be using a pretty good size pump."

Sandhofner said he doesn't know how much water has been diverted from the hatchery.

PG&E uses water from Milseat Creek as a "natural channel" to a nearby forebay. He said the hatchery has an agreement to use water running from Milseat Creek, but it replenishes what it takes.

DISASTER AT McCUMBER LAKE

by Alan Davies

Ridge Rider News
8/1/88

Add these ingredients:
Low water inflow!
High water discharge!
High Temperature!

The result is a deadly combination and a major fish kill.

On Friday, July 22, hundreds of dead fish were observed on the surface of McCumber Lake. The California Department of Fish and Game officials were summoned and counted over 600 dead fish on one side of the lake. The temperature at the dam was noted to be 90 degrees.

The RRN reported last month to PG&E and to the DFG the excessive discharge of water from the lake contrary to the Federal Energy Regulatory Commission agreement. But the water level continued to drop and when the lake became sufficiently shallow, the July heat warmed the water and conditions became intolerable for the rainbow trout.

The regulatory agreement on page 29, Article 33e requires PG&E to discharge a minimum of 3/10 of a cubic foot per second from the dam spillway. Article 33g requires PG&E to maintain McCumber Lake at FULL capacity in the summer season April 1 through Sept. 10.

Contrary to this agreement, water has been released at a rate 5 to 7 times the allowed amount for the last 1 1/2 months. The consequence has resulted in the systematic destruction of fishlife. This reporter has observed the reduction in the lake level weekly during this period.

This week, Dave Hoopaugh - Environmental Biologist for the DFG was interviewed regarding the continuing threat to wildlife habitat at Lake McCumber. Mr. Hoopaugh stated he visit the disasterous scene on Friday and again on Monday. He counted over 600 dead trout on one side of the lake, many of them irreplaceable 20" natives. he provided an estimate of 3,000 dead fish with an average value of .50 cents each. he does not intend to recommend replacement by PG&E.

As a temporary solution to the crisis, additional water will be drawn from Battle Creek Reservoir, but no water will be spilled into the controversial inlet area. The fish screen above McCumber Lake has been removed in order to allow any remaining fish to escape the warm McCumber water.

Permanent solutions were also discussed which included: modification of the regulatory agreement to maintain McCumber full in the summer season; to fence approximately 1/2 mile of McCumber Meadow to exclude cattle and to specify a 1 1/2 cubic foot discharge all summer from McCumber dam.

This week, the dams were viewed and the current discharges were noted. On Thursday, the release at Battle Creek Reservoir was 3 cubic feet and the inflow at McCumber was about 1 1/2 cubic feet. On Monday, July 26, PG&E <u>finally</u> reduced the excessive discharge from McCumber to less than 1/2 a cubic foot, but the lake level remains 4 feet below the spillway.

The RRN will keep you advised on upcoming developments at the lake and we welcome letters from concerned citizens.

KRCR-TV REDDING, CALIFORNIA
P.O. Box 7R • 2770 Pioneer Drive, Redding CA 96099 • (916) 243-7777

4 August, 1988

TO: Whom it May Concern

Our News organization is EXTREMELY interested in the situation at Lake McCumber. We trust you will provide the information to the interested parties they require.

I also hereby request we be placed on any mailing lists your agency or company has for News media.

There is no question the people here are deserving of answers. Rest assured we will be following the story to it's conclusion.

Thank you for your co-operation and help.

Sincerely,

Cal Hunter
News Director
K R C R Television

Wintu Audubon Society

CHAPTER OF THE NATIONAL AUDUBON SOCIETY

P.O. Box 1318, Redding, California 96001

Federal Energy Regulatory Commision
901 Market Street
Suite 350
San Francisco. Ca,94102

McCumber Lake, a reservoir on the N. Forkof Battle Creek in S. E. Shasta County, is managed by Pacific Gas and Electric Co. under your licenseProject #1121. The license designates specific water releases during the summer season to protect the fishery resource.

Recently water temperatures roseand dissolved oxygen dropped resulting in a massive kill of resident salmonid fish.

Concerned local residents have been monitoring water releases from the reservoir and are convinced that water management has not been in compliance with the project license and are the major factor causing the fish kill.

In addition to its fishery McCumber Lake has high wildlife and aesthetic values. Shallow areas form a freshwater marsh which supports a variety of waterfowl and is a favored feeding area for resident bald eagles.

Pacific Gas and Electric Co. has recently proposed construction of a dike to separate and dry up this shallow marshy portion of the lake. Their claimed objective is water conservation through reduced seepage and evaporation. Unfortunately this proposal would destroy the most productive wildlife habitat of the reservoir.

Wintu Audubon Society

CHAPTER OF THE NATIONAL AUDUBON SOCIETY

P.O. Box 1318, Redding, California 96001

The Wintu Audubon Society wishes to express its concern regarding the management of McCumber Lake and its desire to maintain its fishery, wildlife productivityand aesthetic quality.

We request that the Federal Energy Regulatory Commission review the provisions of Project #1121 and determine the licensee compliance.

We further request that no permission be granted for any modification of without an environmental impact report and public hearings.

Sincerely,

James D. Stokes

James D. Stokes
Conservation Chairman
Wintu Audubon Society

SOCIETY TO SAVE McCUMBER LAKE
P.O. BOX 504
McCUMBER LAKE ROAD
SHINGLETOWN, CA 96088

July 31, 1988

FEDERAL ENERGY REGULATORY COMMISSION
901 Market Street
Suite 350
San Francisco, CA 94102

RE: Project #1121

To whom it concerns:

The purpose of this letter is really two-fold; the first, being to acquaint your Commission with the happenings in our area and secondly, to, hopefully, open a line of communication between the Commission and the people of our area.

Enclosed with this letter, please find a video tape and a chart of water releases -- both in regard to our once beautiful mountainous wilderness area at the base of Mt. Lassen -- specifically, McCumber Lake and the surrounding streams, such as Bailey Creek. Our society is dedicated to the restoration of the lake, and the wildlife habitat for the fish, the Bald Eagle, the Osprey, ducks, geese, etc. which depend heavily on this lake for refuge. The creeks in the area -- specifically Bailey Creek-- is also a mainstay for wildlife in the area.

The Pacific Gas and Electric Company has plans to alter the size and the basic shape of McCumber Lake, stating "excess seepage" as the reason for the alterations. In order to make it appear as if the seepage is indeed "excessive", the company has withheld incoming flows into the lake (documented proof available) and made excessive releases FROM the lake (documented proof). The enclosed charts, maintained by a resident near the dam, will attest to the excessive releases. We have photos to attest to the method of withholding the incoming waters. This is not the first infraction of the utility company and McCumber is not the first of P.G. and E.'s victims where the mountain waters are concerned -- they have been diverting the waters of Bailey Creek - north of the lake. Both of these infractions have occurred through the same project -- Project #1121. The company representatives have neither been helpful nor compassionate with our problem, treating it like it is none of our concern. We, the people of Shingletown -- particularly the property owners along the shores of the lake and the property owners along the banks of Bailey Creek are VERY CONCERNED about this big robbery of Nature. We bought in this area because we fell in love with the asthetics of this wilderness area, the availability of good fishing, and the opportunity to enjoy the native wildlife in its natural habitats. If this company is allowed to preceed, unchecked, all the above factors are in jeopardy -- as are our property values and our futures.

We are fortunate in having people in the area who are concerned

enough about this problem that they are willing to speak up and to try, through proper avenues, to rectify this situation. As you will note from the video, the news reporter took an interest in this situation, gave it good coverage, and is willing to keep abreast of the situation to report any changes, good OR bad. We do not want this to develop into an oout-and-out water war, but if there is not some intervention in our behalf, it could well develop into a very distasteful confrontation. According to the FERC Agreement, there are guidelines throughout the agreement that P.G. and E. must adhere to. Let us state, in fact, there are serious infractions concerning the company's adherence to this agreement. We support -- and request -- an investigation into these important infractions of the agreement. This mountain STILL belongs to THE PEOPLE, the waters are necessary to maintain this mountain, it's inhabitants -both human, animal, fish, and fowl. Once again referring to the FERC agreement -- these are the items that can be reviewed from time to time by the Commission.

As stated earlier in this letter, we have documented proof which will attest to the facts we have related to you. They are available to you upon request. We implore you, FERC Commission, to open a clear line of communication with us, so we can mutually assist each other to a satisfactory conclusion.

After relating the facts to you, supplying you with the video and the release charts, perhaps you will agree there is a need for some investigative work to be done on this particular project. You no doubt, notice the numerous infractions concerning this area. We, the people of Shingletown, the persons with the Society To Save McCumber Lake and the Committee To Save Bailey Creek are all united in requesting your assistance and involvement in this matter. We will anxiously be awaiting your reply by return mail.

Most sincerely,

Fred Bailey Jr.

Fred Bailey, Jr -- Society to Save McCumber Lake

Douglas Diehl

Doug Diehl, - Society to Save McCumber Lake

Lyn Brown

Lyn Brown, Paralegal - Society To Save McCumber Lake

Stu Stewart

Stu Stewart ,- Soceity to Save McCumber Lake

Enclosures:

KRCR TV Video
Misc. news articles
Water Release Chart

R. D. Lapham, D.V.M.
Bob Lapham, - Committee to Save Bailey Creek

on vacation (contacted by phone)
Bob Wieland, - Committee to Save Bailey Creek

Lyn Brown
Lyn Brown, Paralegal- Committee to Save Bailey Creek

Copies, less the video, sent to:
(Video available upon request to Doug Diehl)

California Department of Fish and Game
Attn: Pete Bontidelli, Director
1416 9th Street
Sacramento, CA 95814

California State Department of Water Resources
DIVISION OF WATER RIGHTS
Attn: Ray Walsh, Director
P.O. Box 2000
Sacramento, CA 95810

California Assemblyman Stan Stathem
429 Redcliff Drive
Redding, CA 96002

P.O. Box 942849
Sacramento, CA 94249-0001

Lt. Gov. Leo McCarthy
California State Capitol
Sacramento, CA 95814

Attorney General John Van De Camp
California State Capitol
Sacramento, CA 95814

P.O. Box 944255
Sacramento, CA 94244-2550

U. S. Senator Alan Cranston
United States Senate
Washington, D.C. 20510

California State Senator Jim Nielsen
2400 Washington Ave.
Suite 120; Redding, CA 96001

State Capitol Building
Sacramento, CA 95814

Copies (cont)

Anglers of California
Attn: John Beuttler, Executive Director
2830 Tenth Street
Suite 4
Berkeley, CA 94710

LITTLE HOOVER COMMISSION
1303 "J" Street
Suite 270
Sacramento, CA 95814
Attn: Jeanine English

Audobon Society
Western Regional Office
Attn: Jim Stokes
Sacramento, CA

Brewer, Kleiman, and Galine
Attn: George Brewer, Attorney At Law
Marc-Bradley
247 N. San Mateo, Blvd.
San Mateo, CA 94401

Wally Herger

Terri Cox
Attn: Ridge Rider News
Shingletown, CA 96088

KRCR TV News Director

CHART OF WATER RELEASES AT McCUMBER LAKE
From 5/26/88 to 7/29/88
DOCUMENTED BY DOUG DIEHL

Date Of	Time Of	Rainfall Measure	Scale	Discharge C.F.S.	Depth At Dam	Distance BelowSpillway
5/26	3:30 p,m.	.20	.52	1.4904	16.2	18 7/8"
5/27	4:30 p.m.	.01	.52	1.4904	16.2	18 7/8"
5/28	4:00 p.m.	2.27	.52	1.4904	16.3	17 "
5/29	4:00 p.m.	.02	.53	1.8468	16.3	17 "
5/30	4:00 p.m.	.00	.52	1.4904	16.35	16 ½ "
5/31	12:00 p.m.	.05	.53	1.8468	16.35	16 ½ "
6/1	1:10 p.m.	.02	.53	1.8468	16.35	16 ½ "
6/2	6:10 p.m.	.00	.53	1.8468	16.25	18 "
6/3	4:00 p.m.	.00	.52	1.4904	16.25	18 "
6/4	4:30 p.m.	.10	.52	1.4904	16.20	18 3/4 "
6/5	5:00 p.m.	.41	.53	1.8468	16.20	18 3/4 "
6/6	6:00 p.m.	.21	.54	2.2275	16.25	18 "
6/7	11:00 a.m.	.68	.54	2.2275	16.25	18 "
6/9	11:15 a.m.	.10	.53	1.8468	16.1	20 "
6/10	12:15 p.m.	.03	.53	1.8468	16.1	20 "
6/11	1:00 p.m.	.00	.53	1.8468	16.1	20 "
6/12	2:00 p.m.	.00	.53	1.8468	16.0	21 1/8 "
6/13	3:10 p.m.	.00	.52	1.4904	16.0	21 1/8 "
6/14	2:00 p.m.	.00	.53	1.8468	16.0	21 1/8 "
6/15	3:00 p.m.	.00	.53	1.8468	16.0	21 1/8 "
6/16	3:00 p.m.	.00	.53	1.8468	16.0	21 1/8 "
6/17	3:30 p.m.	.00	.53	1.8468	16.0	21 ½ "
6/18	12:15 p.m.	.00	.52	1.4904	15.9	22 ¼ "
6/19	5:00 p.m.	.00	.52	1.4904	15.9	22 ½ "
6/20	6:00 p.m.	.00	.52	1.4904	15.9	22 ½ "
6/21	10:00 a.m.	.00	.51	1.161	15.9	22 3/4 "
6/22	10:30 a.m.	.00	.52	1.4904	15.95	22 1/8 "
6/22	P.G. and E. cleaned moss from weir					
6/23	12:20 p.m.	.00	.52	1.4904	15.85	23 ¼ "
6/24	10:30 a.m.	.00	.52	1.4904	15.80	23 ½ "
6/25	9:00 a.m.	.00	.51	1.161	15.75	24 "
6/26	10:30 a.m.	.00	.52	1.4904	15.73	24 ¼ "
6/27	3:35 p.m.	.00	.52	1.4904	15.70	24 ½ "
6/28	7:00 p.m.	.00	.53	1.8468	15.65	25 ¼ "
6/29	5:00 p.m.	.00	.53	1.8468	15.55	26 3/8 "
6/30	11:00 a.m.	.00	.52	1.4904	15.50	27 "
7/1	10:30 a.m.	.00	.52	1.4904	15.50	27 1/8 "
7/2	10:00 a.m.	.00	.52	1.4904	15.45	27 7/8 "
7/3	2:00 p.m.	.00	.52	1.4904	15.40	28 ½ "
7/4	3:00 p.m.	.00	.52	1.4904	15.35	29 ¼ "
7/5	3:30 p.m.	.00	.52	1.4904	15.30	30 "
7/6	3:00 p.m.	.00	.52	1.4904	15.25	30 ½ "
7/7	4:00 p.m.	.00	.52	1.4904	15.20	30 3/4 "
7/8	2:00 p.m.	.00	.52	1.4904	15.10	32 "
7/9	3:00 p.m.	.00	.52	1.4904	15.00	33 1/8 "
7/10	4:00 p.m.	.00	.52	1.4904	14.90	34 ¼ "
7/11	6:00 p.m.	.00	.52	1.4904	14.80	35 ½ "
7/12	5:00 p.m.	.00	.52	1.4904	14.70	37 ½ "
7/13	3:00 p.m.	.00	.54	2.2275	14.60	38 5/8 "
7/14	5:00 p.m.	.00	.54	2.2275	14.50	39 ½ "
7/15	1:00 p.m.	.00	.54	2.2275	14.40	40 ½ "
7/16	3:00 p.m.	.00	.54	2.2275	14.30	42 "

McCUMBER LAKE WATER RELEASES
PAGE TWO

Date of	Time of	RainfaLL Measure	Scale	Discharge C.F.S.	Depth At Dam	Distance BelowSpillway
7/17	4:00 p.m.	.00	.54	2.2275	14.20	42 7/8 "
7/18	3:00 p.m.	.00	.54	2.2275	14.05	44 ½ "
7/19	1:30 p.m.	.00	.54	2.2275	13.90	46 1/8 "
7/20	3:00 p.m.	.00	.54	2.2275	13.70	48 ½ "
7/21	1:00 p.m.	.00	.54	2.2275	13.50	51 1/8 "
7/22	3:30 p.m.	.00	.54	2.2275	13.30	54 "
7/22	NOTIFIED 7R News ---Story done -- see video					
7/23	4:00 p.m.	.00	.53	1.8468	13.15	55 3/8 "
7/24	8:00 p.m.	.00	.53	1.8468	13.05	56 ½ "
7/24	Have taken pictures of Weir and the Scale @ McCumber Res Below top of boards in Spillway					
7/25	1:00 p.m.	.00	.53	1.8468	13.00	57 1/8 "
7/26	10:00 a.m.	.00	.49	.5886	12.90	58 ¼ "
7/27	8:00 a.m.	trace	.48	.3564	12.90	58 ¼ "
7/27	MORE PICTURES					
7/28	8:00 a.m.	.00	.47	.1647	12.85	58 3/4 "
7/28	MORE PICTURES					
7/29	7:00 a.m.	.00	.47	.1647	12.80	59 ¼ "

BATTLE CREEK RESEVOIR

					Below Top Boards in Spillw
7/24	7:00 p.m.	.00	.26	2.9529	27 "
7/28	11:00 a.m.	.00	.26	2.9529	34 "

JULY 15, 1988

~~WGP 2754~~

~~S-831~~

Mr. R. John Sandhofner
Pacific Gas and Electric Co.
Northern Area
25449 Humbug Road
Magalia, Ca., 95954

Licenses for D.D. well below Reservoir
S16 T31N, R2E
file under S-831
KSN

Dear Mr. Sandhofner,

We are writing this letter to address the issue of Lake McCumber Reservoir, North Battle Creek FERC project No. 1121.

The stream in dispute runs all the way through our property and empties back into Battle Creek. Since the stream is the main reason we purchased our property we feel we have a lot to lose if PG & E dikes off Lake McCumber.

In your letter to the editor of the Ridge Rider News you indicated this stream automatically goes dry every season. This is not true. In fact according to our neighbors that live on the same stream this is only the second time in twelve years it has gone dry. We are commencing our fourth year and this is the first time it has been totally dry. You also stated in your letter that you were doing a study of the bald eagle and the loss of habitat around the so called "isolated pond". What about all of the other animals and creatures who have come to depend on the stream for their water source? The "isolated pond" is not the only issue. With PG & E's manipulation of the two resorvoirs they have managed to keep the water supply shut off without building a dike.

According to the rain fall figures in the newspapers we had twice the amount of rain in May and June of 1988 than we did have in the same period in 1987. The stream was dry in 1988. The stream ran at a good flow in 1987. Control of the reservoirs is the only explanation for this. Twice during the heavy rains in 1988 the stream started to run and twice it was stopped by the PG & E's attendant adjusting the increase of outflow from McCumber reservoir.

If your FERC license requires that you maintain both reservoirs as near full as possible, why is it that North Battle Creek is over full, while McCumber is below normal? We say over full for North Battle Creek because we took a ride to the reservoir and found that the water level was fifty inches above the spillway due to the addition of planks and plastic sheeting having been added to hold more water.

Lake McCumber is in a disgraceful condition. While fishing there over the fourth of July weekend we saw numerous dead fish and snails floating on top of the water. It is our opinion that much of this could have been avoided if PG & E had not been so concerned about allowing water to get into the "isolated pond", and released water from North Battle Creek reservoir.

When we purchased our property it was advertised by the realtor to have a running stream, which it did. When we applied for our building permit we were informed that since we had a running stream we would have to make adjustments in our plans to allow for the stream, meaning that our buildings, septic system, well, etc. had to be a certain distance from running water. Now that we have made these adjustments we have no running water, just a big dry ditch running the length of our property.

As we have already stated, PG & E has accomplished shutting down the stream, so to dike or not to dike is not the real issue at this point in time. The real issue is the proper management of the water levels at both reservoirs. Something should be done NOW!!! Not a year from now!!!

If PG & E continues to hold back the water level and then later decides to build a dike, we would like to know what responsibility they are going to take for this big, ugly, long, dry ditch running through our property?

September 24, 1983

5831 files

Robert Grieve, Director
Federal Energy Regulatory Commission
400 First Street, N.W.
Washington, D.C. 20426

Jackets pulled & inserted

Dear Mr. Grieve:

This letter summarizes our feelings about McCumber Lake:

Destruction of McCumber Lake:

This started about 10 plus years ago. McCumber Lake used to have a narrow spillway where boards could be added to raise the water level. It had the same capabilities of increasing the water depth to four feet above the existing dam height, as upper Battle Creek (which you have pictures of).

P.G.&E. claims that due to Earthquake Laws they had to widen the spillway and destroy these capabilities. I have never been convinced this was true. This could be checked on by F.E.R.C. to find the real reason why they decreased the height of the dam, and destroyed 1/2 of the water retention capabilities of the Lake.

P.G.&E. are now telling us that due to sink holes in the West inlet portion of the Lake that they are loosing 6-3-10, and even as high as 20 CFS of water, and they have to dike off 25% of the Lake in order to stop this. We, the people of this area, know these statements are very false. For the past 85 years, from April 1 to September 10, less than 2 second feet of water has fed into McCumber Lake from the only major stream - Battle Creek. This lake has remained full from 4/1 to 9/10 for all these years, with sufficient water running over the top of the dam to maintain the 0.30+ CFS discharge required by F.E.R.C. We are not "ignorant hillbillys". We know that with less than 2.00 CFS feeding the Lake, that they cannot be loosing these P.G.&E. exaggerated claims of water loss. Please remember, they are only letting out 0.30 CFS of water from upper Battle Creek, which is about seven miles up stream from McCumber Lake.

P.G.&E. is stating (please read Exhibit D, page 9) - Disaster at McCumber Lake, quote: Permanent solutions are also discussed which include, "modification of the Regulatory Agreement to maintain McCumber Lake full in the summer season; to fence approximately 1/2 mile of McCumber Meadow to exclude cattle, and to specify a 1-1/2 cubic foot discharge all summer from McCumber dam." If they get their way, this will completely destroy McCumber Lake, which is one of the oldest lakes in Northern California.

The reasons for P.G.&E. to do this are:

1) P.G.&E. dislikes having a large accumulation of water stored that they cannot use in June, July and August, when their demand for hydrogeneration is at its peak.

2) After 9/10, when Fall storms come and swell the stream, P.G.&E. has all the water they need for hydrogeneration.

3) Again, P.G.&E. wants to use the Spring run-off of water for generation of hydropower in June, July and August, when they need it the most.

P.G.&E. could care less about the destruction of McCumber Lake, the Eagle situation, environmental impact, fish life, fire protection, and people with property on the seasonal stream. Their only goal is to take the water from the Lake and use it for hydrogeneration.

Mr. Grieve, this letter is not pointed toward F.E.R.C. We understand that your Commission only deals with facts. This letter is directed more toward the "cc's" on our letters to you. The politicians, fish clubs and environmental impact agencies, along with the public. We have stated as clear as we can what will happen to McCumber Lake if we do not take a stand and unite to do something about these facts. This fight is going to take more than one group of concerned citizens; the Shingletown community, and the Shingletown Save McCumber Lake Committee. We need help from all concerned organizations.

Thank you, again, for your concern in this matter.

Sincerely, Douglas Diehl

Doug and Joy Diehl, Spokesman
Shingletown Save McCumber Lake Committee

DWD/jmd
Enclosures

cc: Clifford Emmerling, Reg. Director, F.E.R.C.
Randy Brown, North CA Rept. Fish and Wildlife Serv.
Tom Richardson, Reg. Mgr. Fish and Wildlife Serv.
Ray Walsh, Director, State Water Resources Control Board
CA Assemblyman Stan Statham
CA State Senator Jim Nielsen
Congressman Wally Herger
Pete Bontidelli, Director, CA Dept. of Fish and Game
Tom Hesseldenz, Reg. Mgr. CA Trout
Cal Hunter, Director, Channel 7R News
Jim Stokes, Audoban Society
Jeanine English, Director, Little Hoover Commission
Carl Weidert, Sierra Club

McCUMBER ISSUE: In the past 3 weeks, there has been much correspondence to the Federal Energy Regulatory Commission. The following is the latest in relaying Shingletown concerns and establishing time-lines.

"Dear Mr. Grieve:

In this correspondence to you, we will attempt to prove to your satisfaction that the fish kill was not an act of "Mother Nature", and that the diking of McCumber Lake, and the fish kill are not two separate issues; one caused the other.

Approximately March 1, 1988, we heard chain saws and chopping in the willows (where PG&E now intend to dike off a portion of the Lake). This went on for several weeks. Upon our neighbors and our investigation, we discovered that PG&E had a crew clearing a path through the willows. At this time, they were staking and surveying this path. Upon questioning some of the workmen, we found that PG&E were planning to dike off a portion of Lake McCumber. The people in this area became very concerned about what was happening to our lake. Through the Grapevine, we found that PG&E and Fish and Game were planning a meeting on April 18, 1988, at PG&E headquarters in Manton, CA, concerning this issue."

"Immediately, I contacted Fish and Game in Redding and asked them if we could attend this meeting. They had no objections, but suggested I contact -------- PG&E Supervisor, for his opinion. I contacted ------ who informed me that this was a meeting between PG&E and Fish and Game, and the public was not invited. I stated to him we felt it was of great concern to us, and if we were forcefully kept out of the meeting we could publicize this through the Ridge Rider News. _____ stated at this time he did not have the authority to give me an answer. He suggested I call John Sandhofner, Superintendent." "I contacted Mr. Sandhofner and relayed the same message to him. He said we were "not welcome", however, it was PG&E policy that they could not forcefully keep us from

Thanks, Wayne, for opening the pumps so I could get to the fire.
~ Cricket ~

LETTERS to the EDITOR (And From) CONTINUED:

attending the meeting. I told him we would be there on 4/18/88. On this date, Doug Diehl, Joy Diehl, and Bob Hair (CA Sports Fishing Association) attended the meeting between PG&E and Fish and Game in the Manton office.

At this meeting, PG&E stated they had no other alternative but to dike off the West portion of the Lake, and inferred they would be doing this immediately. We were very adamant about the Eagle situation; and, also, the fact that property owners on the seasonal stream were not notified of the proposed diking. We also asked about the F.E.R.C. Agreement. We were informed that PG&E owned the property, the Lake, and the water rights, and they would worry about the F.E.R.C Agreement, and for us to worry about our own business.

Upon leaving the meeting, we came home and informed the people of Shingletown the outcome of said meeting, and started planning the strategy we would use to fight for our cause -- save McCumber lake.

Feeling we had very little time, Terri Cox, Ridge Rider News Editor, sent an open letter to Mr. Sandhofner, of PG&E, "asking for a letter or documents showing the time line, and the procedure you must follow to be able to dike off a portion of McCumber reservoir...". Among other questions she asked, "are you planning to let McCumber Lake fill this year or not? If not, why?"

On June 20, 1988, PG&E sent a letter of reply to the Editorial letter." "Upon reading Mr. Sandhofner's letter we found we had bought her stock? This paper is certainly NOT suggesting this step. PG&E has done, and will continue to do, many good things for the people that they serve. The point of this whole issue is that, when large corporations become even larger, they seem to begin to loose sight of the small people. They begin to play 'god' and 'know what is best for us'. Citizens must monitor and watch. This is called balancing-the-power and we, the common folk, are the only ones that can make sure that there is a balance between large companies and the public interest. Sometimes it is necessary to make an outcry and ruffle feathers to get a point across.

We quote from the F.E.R.C Agreement with PG&E concerning the management of Lake McCumber, "Should additional fish and wildlife measures be required by the public interest in the future, we have reserved authority to order such measures." We are the "public" that they are talking about, folks, and we are concerned about the fishing and the eagles and all the wildlife that live and thrive around our Lake.

The RRN is in receipt of the September issue of the Sierra Club Newsletter. We would like to quote from this.

"The threat is to a nesting pair of bald eagles that use McCumber Lake in Shasta County as a feeding area. McCumber Lake....has formed several acres of wetlands and riparian habitat on one area of the lake, identified as the primary feeding area for the nesting eagles and also used by waterfowl for nesting and rearing.

PG&E purchased the original power company, and their permit requires them to keep the lake full from April to September 10 annually. The lake was kept full even through the '76-'77 drought. This year PG&E chose to violate their permit, dumping water through the spring

some time, and the lake would not be diked off immediately. Other statements in his letter are very erroneous...such as, "we do not expect to fill it this year because the run-off is well below normal, and the rate of leakage in the sink holes continues to exceed the inflow into the reservoir." This statement is outrageously false! The West inlet, where they are claiming these sink holes are, has never, at this time or any other time this year, had water in it.

This year, in the Shingletown area, we have had seven more inches of rain than last year; and, also, more snow (Federal Weather statistics). If you blindly and unquestionably believe the PG&E statements you stand a good chance of being put in our category..."ignorant hillbillys."

One other fact: We are sending you photographs of upper Battle Creek spillway showing the boards and plastic PG&E used to suppress water. Imagine how you would feel if you were a member of this community, and went to upper Battle Creek and saw these boards and plastic holding back the water to McCumber Lake. Watching our Lake continually dropping, with a tremendous fish kill and a forest fire, with inadequate water for fire protection. If this should happen in future years, I feel it would be very advisable for PG&E to patrol Battle Creek spillway.

PG&E has driven off our Eagles. They have destroyed our wildlife, have killed our fish, and have destroyed our fire protection. We are asking for all the help we can receive to fight this, and not let them alter and destroy our lake.

Sincerely, Douglas W. Diehl
Save Lake McCumber Lake Committee"

(And From the RRN) I talked with a lady last night that is a stockholder in PG&E. Did you know that she has even thought about selling the lake was not filled by June 1 and has not been filled all summer. Significantly, the arm used by the bald eagles and waterfowl was never filled.

Aquatic vegetation is controlled by allowing water to go over the spillway, skimming the vegetation from the surface. The lake was never allowed to fill to make this action possible.... A predictable disaster ensued in July when the water heated up, killing off the algae, depleting oxygen, and creating a massive fishkill. This has not only ruined the lake for future recreation, but may cause abandonment of the eagle nest.

PG&E requested permission to construct a dike on the above mentioned lake arm, ostensibly to reduce seepage through the alluvial soils. However, this water collects in a ditch/stream and re-enters Battle Creek....and thus is not lost for power production. It is suspected that the lake was left unfilled this year in order to complete the dike project this summer. The DFG fisheries biologist and area warden knew that PG&E would not fill the reservoir after discussing the dike, but appeared to be ushering the project through the system...it was not until conservationists expressed concerns about the endangered bald eagle that the proposal received serious evaluation.

What happens to these eagles is important. This nest produces young that are adapted to people and may choose nest sites near people, a trait that would enhance the survival of California bald eagles."

The RRN feels that PG&E could make Lake McCumber one of California's finest natural habitat areas by utilizing the west arm of the lake for a wildlife area. If managed correctly, there would be room and water aplenty for power, people and wildlife. We anxiously await correspondence from F.E.R.C. and their decision.

State of California

The Resources Agency

Memorandum

Date : JUN 02 1987

To : G-8
Division of Water Rights
State Water Resources Control Board
901 P Street
Sacramento, CA 95814

From : **Department of Water Resources**

Subject : Notice of Application Filed

Dam Name: North Fork Diversion Dam Number: 1024-7

An application was filed on May 11, 1987, for approval of plans and specifications for the construction of North Fork Diversion Dam. The dam, in the SE-1/4 of Sec. 20, T. 7 N., R. 18 E., MDB&M, is situated on North Fork Stanislaus River, tributary to the Stanislaus River, in the County of Alpine.

The structure will be 53 feet in height with a storage capacity of 120 acre-feet, at an estimated cost of $1,242,083.

The purpose and use are diversion and power.

The proposed work includes construction of a concrete gravity dam, to be built as part of the North Fork Stanislaus River Hydroelectric Development Project, for diversion purposes.

Questions regarding the project should be directed to the applicant:

Mr. Angelo F. Demattei
Project Director
Sierra Constructors
P. O. Box 593
South San Francisco, CA 94080

J J Doody

James J. Doody, Chief
Division of Safety of Dams

DWR 155 (REV. 8/83)

SURNAME/FILES

(916) 324-5676

JANUARY 09 1989

In Reply Refer
to:332:KSN:S8534

Mr. and Mrs. Gordon F. Crafts
33761 South Highway One
Gualala, CA 95445

Dear Mr. and Mrs. Crafts:

STATEMENT OF DIVERSION AND USE NO. 8534

We were informed by Janet A. Minch of Nevada City that you are now owners of the property which the above Statement of Water Diversion and Use serves. Therefore, we will change ownership of above Statement No. 8534 to: Gordon F. Crafts and R. Alyce Crafts.

If there are any questions regarding this matter, please write or call (916) 324-5676.

Sincerely,

ORIGINAL SIGNED BY

Koso Nodohara
Sanitary Engineering Associate
Application Unit #2

cc: Janet Minch
Attorney At Law
P.O. Box 460
Nevada City, CA 95959-0460

!KSNODOHARA/lbitnoff 1/7/89 zs8534

SURNAME | KSN 1-9-89 | | | |

DWR 540 REV.1/86

86 39106

Referring once again to your letter to the Ridge Rider News, we noticed your concern for the customers. Not being sure if you are aware of the full impact this is having on the property owners we are enclosing a map of the area showing how many people are being directly effected by this stream. We would also like to remind you we are customers too!!!!!

Sincerely,

Robert and Jerry Newton

Robert and Jerry Newton

CC: State Water Resources Control Board
PG&E SAN FRANCISCO
W.D. PAHLAND
FEDERAL ENERGY REGULATORY COMMISSION
RIDGE RIDER NEWS

Enclosures: Map

RIDGE RIDER NEWS
P.O. BOX 384
SHINGLETOWN, CA 96088
(916) 474-5232
Office: Hwy 44 & Wilson Hill Rd.

~~WGP~~
~~EDJ~~
~~GKM~~

S-831

Federal Energy Regulatory Commission
901 Market Street
Suite 350
San Francisco, CA 94102

August 2. 1988
RE: Proj.1121

To Whom It May Concern:

We have carefully covered the McCumber Lake issue (PG&E Project # 1121) for the past four months. At times, there have been 2 reporters following the chain of events. We repeatedly phoned PG&E (Mr. Sandhofner, Magalia, CA) and talked numerous times to Mr. Don Weidlein, Mr. Dave Hoopaugh, and Mr. Dave Smith of Fish and Game. What came out of all these interviews and questioning was a fish kill of gigantic proportions.

Enclosed please find 3 articles of many that have been done by Ridge Rider News- Shingletown, CA and Record Searchlight-Redding, CA.

We urgently ask you to instigate a full investigation into PG&E and the Department of Fish and Game management of Lake McCumber.

Sincerely,

A. Terri Cox, Editor/Publisher
Ridge Rider News
P.O.Box 384
Shingletown, CA. 96088

Carl L Weidert III Cons Chair
Shasta Group Sierra Club

ON McCUMBER LAKE: EDITORIAL 8-1-88 RRN

(If you could get on it in a boat.) The RRN has been dealing with this issue for about 6 months. Calls to PG&E and DFG have been most numerous concerning the condition of the lake and the seeming lack of action from either. Every time there was a letter printed in the Editorial column or an article written about McCumber, a copy was sent to Mr. Sandhofner of PG&E and DFG was made aware.

Last Friday, after a frantic phone call from a McCumber Lake resident, I called Mr. Don Weidlein at Fish and Game. He stated that at 1:30p.m. some water was being let out of Battle Creek Reservoir to remedy the situation at McCumber.

Around 6 p.m., I drove up to the Lake to take a look. As I was standing at the edge by the dam looking at a dead rainbow trout, a DFG official came up and demanded to know what I was seeing. I turned and told him "the dead fish." He walked over and examined the rainbow, took a thermometer from his pocket and measured the temperature of the lake. He stated, "It's 90 degrees. It's too bad we weren't told about this 2 days ago. This might have been avoided."

Now, folks, if someone messed up a stream or lake you owned, you'd sue them. PG&E and DFG are equally responsible for thousands of fish kill. Those fish were paid for out of your tax dollars and now you are going to pay for <u>restocking</u> the lake. And, why was the water dumped from McCumber in February? Yes, I'm tired of this issue, also. But, what we hoped would NOT happen, did. Is the next thing going to be the dyking off of a portion of the lake? Is this "accident" going to be used as a means of support for PG&E's proposed dyking? And why does DFG seem so unconcered? This should be interesting to follow.

September 6, 1988

S-831 ~~[illegible]~~ ~~MKL~~ RFA files

ATTEN: ROBERT GRIEVE, DIRECTOR
Federal Energy Regulatory Commission
400 First St., N.W.
Washington, D.C. 20426

Dear Mr. Grieve:

This week, we are sending you the completion of the McCumber Lake discharge reports. The cover page on the Weir should be self-explanatory. If you do have questions on this, please let me know. In March 1989 (as the article explains) we will continue to give you McCumber Lake discharge reports. Upon your request, we will also forward to you upper Battle Creek Reservoir discharge reports.

Last week, in my correspondence to you, I had a paragraph concerning the Burney fire. At that time, I stated we did not have adequate fire protection for tankers or helicopters to dip from McCumber Lake.

On Saturday, 9/3/88, we had a fire less than two miles from McCumber Lake. When you read these news articles I am enclosing, they will be self-explanatory as to inadequate fire protection.

The P.G.& E. has killed our fish, destroyed our fire protection, and now they want to destroy our lake! We, the people, and all the surrounding residents of Shingletown cannot let this happen. You will be receiving much more literature from us on the proposed diking of McCumber Lake.

Due to the Eagle, Osprey, and endangered species, according to Sandy Jacobson's 1978 report, (which we will forward to you at a later date) we are proposing to make McCumber Lake into a wildlife santuary. With a wildlife santuary, future generations will be able to see the Eagle in all its "magestic glory", and all wildlife species.

Sincerely, Douglas W. Diehl

Douglas W. Diehl, Spokesman
Shingletown Save McCumber Lake Committee

DWD/jmd
Enclosures

cc: Clifford Emmerling, Reg. Director, F.E.R.G., San Francisco
Randy Brown, Northern CA Rep., Fish and Wildlife Service
Congressman Wally Herger
Assemblyman Stan Statham
Pete Bontidelli, Director, Dept of Fish & Game - Sacramento
Ray Walsh, Director, State Water Resources Control Board
Terri Cox, Ridge Rider News Editor
Cal Hunter, Director Channel 7R News

EXHIBIT E

S-831

September 13, 1983

Robert Grieve, Director
Federal Energy Regulatory Commission
400 First Street, N.W.
Washington, D.C. 20406

Dear Mr. Grieve:

In this correspondence to you, we will attempt to prove to your satisfaction that the fish kill was not an act of "Mother Nature", and that the diking of McCumber Lake, and the fish kill are <u>not two separate issues</u>; one, caused the destruction of the other.

Approximately March 1, 1983, we heard chain saws and chopping in the willows (where PG&E now intend to dike off a portion of the Lake). This went on for several weeks. Upon our neighbors and our investigation, we discovered that PG&E had a crew clearing a path through the willows. At this time, they were staking and surveying this path. Upon questioning some of the workman, we found that PG&E were planning to dike off a portion of Lake McCumber. The people in this area became very concerned about what was happening to our lake. Through the Grapevine, we found that PG&E and Fish and Game were planning a meeting on April 13, 1983, at PG&E headquarters in Manton, CA, concerning this issue. (attached is a copy of the Minutes of that meeting).

Immediately, I contacted Fish and Game in Redding, and asked them if we could attend this meeting. They had no objections, but suggested I contact Jim Bundy, PG&E Supervisor, for his opinion. I contacted Mr. Bundy, who informed me that this was a meeting between PG&E and Fish and Game, and the public was not invited. I stated to him we felt it was of great concern to us, and if we were forcefully kept out of the meeting we would publicize this through the Ridge Rider News. Mr. Bundy stated at this time he did not have the authority to give me an answer. He suggested I call John Sandhofner, Superintendent (916) 373-1816). I contacted Mr. Sandhofner and relayed the same message to him. He said we were "not welcome", however, it was PG&E policy that they could not forcefully keep us from attending the meeting. I told him we would be there on 4/18/83. On this date, Doug Diehl, Joy Diehl, and Bob Hair (CA Sports Fishing Association) attended the meeting between PG&E and Fish and Game in the Manton office.

At this meeting, PG&E stated they had no other alternative but to dike off the West portion of the Lake, and inferred they would be doing this immediately. We were very adamant about the Eagle situation; and, also, the fact that property owners on the seasonal stream were not notified of the proposed diking. We also asked about the F.E.R.C. Agreement. We were informed that PG&E owned the property, the Lake, and the water rights, and they would worry about the F.E.R.C. Agreement, and for us to worry about our own business.

Upon leaving the meeting, we came home and informed the people of Shingletown the outcome of said meeting, and started planning the strategy we would use to fight for our cause - - save McCumber Lake.

Feeling we had very little time, Terri Cox, Ridge Rider News Editor, sent an open letter to Mr. Sandhofner, of PG&E, "asking for a letter or documents showing the time line, and the procedure you must follow to be able to dike off a portion of McCumber reservoir..." (You have a copy of this letter; page 3, exhibit D). Among other questions she asked, "are you planning to let McCumber Lake fill this year or not? If not, why?"

On June 20, 1983, PG&E sent a letter of reply to the editorial letter (issue 69, June 13). Enclosed is a copy of this letter. Please read this letter very carefully. Upon reading Mr. Sandhofner's letter we found we had bought some time, and the Lake would not be diked off immediately. Other statements in his letter are very erroneous....such as, "we do not expect to fill it this year because the run-off is well below normal, and the rate of leakage in the sink holes continues to exceed the inflow into the reservoir." This statement is outrageously false! The West inlet, where they are claiming these sink holes are, has never at this time, or any other time this year had water in it. (Enclosed are aerial photos to prove this).

This year, in the Shingletown area, we have had seven more inches of rain than last year; and, also, more snow (Federal Weather statistics). If you blindly and unquestionably believe the PG&E statements you stand a good chance of being put in our category...."ignorant hillbillys."

One other fact: We are sending you photographs of upper Battlecreek spillway showing the boards and plastic PG&E used to suppress water. Imagine how you would feel if you were a member of this community, and went to upper Battle Creek and saw these boards and plastic holding back the water to McCumber Lake. Watching our Lake continually dropping, with a tremendous fish kill and a forest fire, with inadequate water for fire protection. If this should happen in future years, I feel it would be very advisable for PG&E to patrol Battle Creek spillway.

PG&E has driven off our Eagles. They have destroyed our wildlife, have killed our fish, and have destroyed our fire protection. We are asking for all the help we can receive to fight this, and not let them alter and destroy our lake.

Sincerely, Douglas Diehl

Douglas W. Diehl, Spokesman
Shingletown Save McCumber Lake Committee

DWD/jmd
Enclosures

cc: Clifford Emmerling, Regional Director, F.E.R.C.
Randy Brown, North CA Rep. Fish and Wildlife Services
Tom Richardson, Reg. Mgr., Fish and Wildlife Services
Ray Walsh, Director, State Water Resources Control Board
CA Assemblyman Stan Statham
CA State Senator Jim Nielsen
Congressman Wally Herger
Pete Bontidelli, Director, CA Dept of Fish and Game
Tom Hesseldenz, Reg. Mgr., CA Trout
Cal Hunter, Director, Channel 7R News
Jim Stokes, Audoban Society

SUMMARY OF MEETING WITH PG&E AND FISH AND GAME

TOPIC: MCCUMBER LAKE

DATE: 4/18/88

TIME: 10:00 A.M

PLACE: Manton PG&E Facility

Present: Wm Fahland, PG&E, Jim Bundy, PG&E, John Sandhofner, PG&E, Dave Hoopaugh, Fish and Game, S. McKevitt, Fish and Game, Doug and Joy Diehl, Bob Hair, CA Sports Fishing Corp. Others present - names not noted in this report.

The meeting began with a discussion on both sides regarding McCumber Lake.

The PG&E stated they would like to cut McCumber Lake down to one fourth its size by putting up a dike. They stated they are losing water out of McCumber to a substantial degree. An option of filling the sink holes in a portion of the Lake was mentioned by Fish and Game. PG&E stated it would cost $100,000 to fill up the sink holes; whereby, putting up a dike would cost between $30,000 to $40,000.

It was brought to the attention of both sides that there are 20 plus properties that have a seasonal stream running through their properties which provides water for fire hazard, irrigation and portable water. If a dike is put on the Lake, these people will no longer have a running stream of water through their properties.

It was brought to the attention of both sides that there are two Eagles that feed on the side of the lake that is to be diked.

The P.G.&E.s could not decide on any other options, but to dike up one fourth of McCumber Lake. Both parties will look into the Eagle issue and request another meeting to discuss this.

Theory regarding McC umber Lake:

California Power + Light

PG&E purchased a portion of McCumber Lake between 1904 and 1909 from CA ~~Hydro~~ Power Corp. In 1927 PG&E acquired another portion of Lake McCumber from Central Pacific Railway Co. There is no concrete information as to whether McCumber Lake was natural with a dam being constructed at some point, or whether it was a man made lake.

There being no further business, the meeting was adjourned at 11:55 A.M. There was no date or time set for the next meeting between PG&E and Fish and Game.

Pacific Gas and Electric Company

Hydro Generation Department
Northern Area
[illegible] Humboldt Road
Magalia, CA 95954
[illegible]

Editor
Ridge Rider News
P.O. Box 384
Shingletown, CA 96088

June 13, 1988

Dear Editor:

As most of your regular readers know, PG&E is studying the possibility of diking off 10 of the 85 surface acres at Macumber Reservoir by reconstructing the existing berm. Recent studies indicate that a considerable amount of water is being lost for generation through sink holes in the "isolated pond". We can account for some of the disappearing water but most of it does not apparently re-enter the hydroelectric water system downstream. This loss of generation adversely effects our customers.

As a result of the above proposal an approximate one year study of the bald eagles has already begun. This study will evaluate what impact the loss of the isolated pond will have on the eagles and in particular whether the loss is significant enough to endanger their existence.

At the completion of the study, California Department of Fish & Game and US Fish & Wildlife Services will be consulted for their concurrence before our going to FERC (Federal Energy Regulatory Commission). FERC has the final say on these matters having gained input from the agencies.

Please be assured that nothing will be done in the way of reconstructing the dike until the eagle study is done, all the agencies are satisfied and FERC has approved the proposal.

In answer to some specific comments in your open letter to PG&E of June 6, 1988, the following observations are given:

(1) As indicated above, the eagle situation is being studied. With only a 12% loss of surface area there is still plenty of habitat left. I am told that Macumber Reservoir has an abundance of food and other wildlife necessities to absorb this small loss.

(2) The loss of habitat as been an annual event in the late summer when the "isolated pond" dries up on its own. There no record of anyone complaining about the loss of fire protection at these times.

(3) PG&E is not aware of any effect the lost water has on local wells. There have been no complaints before when the water dried up in the late summer.

(4) There will only be a 12% loss of surface area. In the past fish have been lost in the "isolated pond" when it dewatered itself naturally each year. It would seem that this sort of annual event would be much harder on the fishery than maintaining a more consistent habitat in the main body of the reservoir. Certainly this would assure more trophy size fish for people all over California to catch.

Regarding your comment about filling North Battle before filling Macumber Reservoir: Our FERC license requires that we maintain both reservoirs as near full as possible from April 1, through September 10th, assuming there is sufficient run off to do so. The FERC license further states we cannot draft from either reservoir until after September 10. Therefore, to release water from NBC would be contrary to our license. We do not expect to fill it this year because the run off is well below normal and the rate of leakage in the sink holes continue to exceed the inflow into the reservoir.

RJ Sandhofner

RJ Sandhofner
Hydro Superintendent

September 3, 1983

Randy Brown
Northern CA Representative
Fish and Wildlife Service
P.O. Box 174
Lewiston, CA 96052

Dear Mr. Brown:

I enjoyed our telephone conversation on 9/2/83.

It was a relief to know that you have been looking into the Project #1121 situation, and that you are well acquainted with Dave Smith and Sandy Jacobson.

The information I am forwarding to you will probably seem somewhat meaningless, as it does not pertain to the Eagle situation. However, I will keep you informed on all past and future correspondence for your perusal.

I received a letter from Congressman, Wally Herger, asking F.E....C. to look into this matter, also.

Again, Mr. Brown, I enjoyed our conversation, and thank you for your concern.

Sincerely,

Douglas W. Diehl, Spokesman
Shingletown Save McCumber Lake Committee

DWD/jmd
Encl.

cc: Tom Richardson, Regional Manager
Fish and Wildlife Service
2800 Cottage Way, Room E-1803
Sacramento, CA 95825

TE:10/01/88 D I V I S I O N O F W A T E R R I G H T S
ED BY DMB DATA BASE REPORT - - PRIMARY SELECTION: RECORD TYPE

000831 REC TYPE(STATE) STATUS: ACTIVE 06/12/1967 01

SEQ #:01 PACIFIC GAS & ELECTRIC COMPANY 05
SEQ #:01 77 BEALE STREET
01 SAN FRANCISCO, CA 94106

FILED:06/12/1967 CUSTOMER #:6036 TYPE: PHONE: 415-972-5310 FEE AMT:$ 0.00 FEE RCD:$ 0.00 DATE ADV: 06

DIR/DIV:00000.000 MAX DIR/DIV ANN/U:00000000.0 AF MAX STO:00000430.0 AF MAX ANN/U:00000000.0 AF YR 1ST USE:1909 07

CE SEQ #:01 TRIB SEQ #:01 NAME:NORTH BATTLE CREEK 12A
02 BATTLE CREEK

CE SEQ #:01 DIVR SEQ #:01 LOT #: SWNE( )15 31N 02EM CAL/COORD:1 N0438800 E2074600 CNTY:45 D/CODE: D/TYPE: WELL: 12BA
CE SEQ #:01 DIVR SEQ #:01 MAP:VIOLA #:CC059 MIN/SER:7.5 LAT: DEG ' " LONG: DEG ' " 12BB
CE SEQ #:01 DIVR/EXTRAC SEQ #:01 DIR/DIV:00000.000 D/D/AC-FT/ANN:00000000.0 STOR:00000430.0 AC-FT STOR CODE: 12BC

CE SEQ #:01 MAX DIR/DIV/SOURCE:00000.000 MAX STOR/SOURCE: 00000430.0 AC-FT 12C
CE SEQ #:01 STREAM CODE:0-219-04-00-0 12D
D/D ST:01/01-12/31 S2: - D/D AMT: 0.0AF STO: - 0.0AF N/AC: 0.0 G: 0.0 P: 0 14
SEQ #:01 ACTION DATE:06/12/1967 COMMENTS:PACIFIC GAS & ELECTRIC COMPANY 22

	1985	1986	1987	1988
J	4198	4450	4899	5220
F	4198	4450	4899	5220
M	4198	4450	4899	5220
A	4198	4450	4899	5220
M	4198	4450	4899	5220
J	4198	4450	4899	5220
J	4450	4673	4899	5220
A	4450	4673	4899	5220
S	4450	(4899)?	5019	5220
? O	4450 ~~4894~~ (4450)	4899	5019	5220
? N	4450 ~~4894~~ (4450)	4899	5019	5220
? D	4450 ~~4894~~ (4450)	4899	5019	5220

+29 85.94

SHINGLETOWN, CALIFORNIA
MONDAY, SEPTEMBER 5, 1988
PRINTED WEEKLY
*****FREE*****
VOLUME III, ISSUE 81

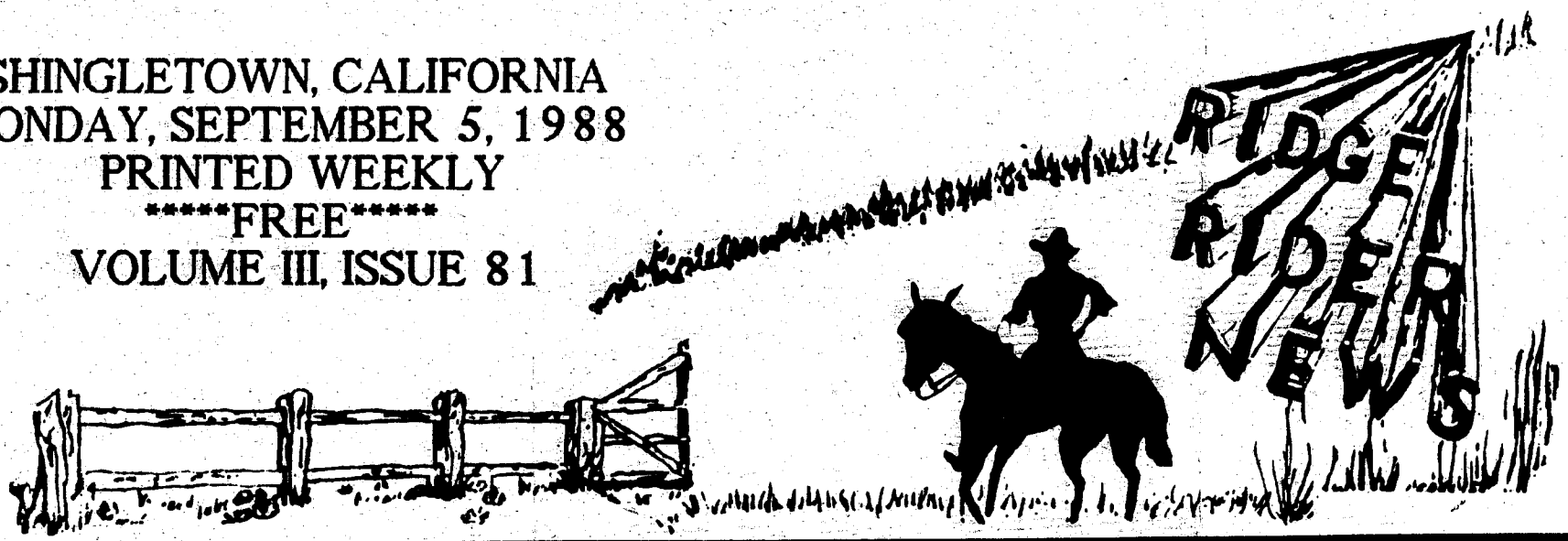

AS OF SUNDAY MORNING THATCHER-INCIDENT FIRE 90% CONTAINED, SAYS CDF

by Kathie Plasier

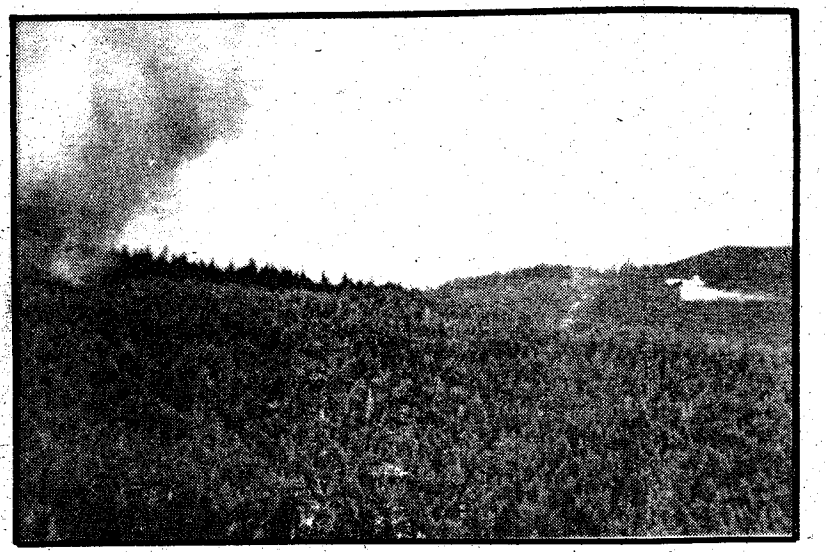

Photo by Jeff Seeley

Photo by Jeff Seeley

THE ONE BUCKET OF WATER TAKEN FROM LAKE McCUMBER DURING THE THATCHER-INCIDENT FIRE

Reporting from CDF's Incident Base Camp here in Shingletown, Camp Manager Jim Thomas said that approximately 60 acres of forest wildland has been consumed as of this writing (Sunday afternoon). The fire was on Roseburg Lumber

afternoon). The fire was on Rosebury [illegible] property and no structures were burned. Firefighters now have the fire under control.

The fire began about 3.00 p.m., on Saturday afternoon, September 3rd. The cause is under investigation. Numerous air tankers and helicopters were quickly on the scene, working with land crews of 18 water tenders, 20 engines and 13 bulldozers. More than 500 men and women fought the raging flames including the Shingletown Volunteer Fire Department. The fire was easily seen by Lake McCumber and area residents who had ringside seats to the frightening spectacle.

CDF's Incident Base Camp, located at Station 22 in Shingletown, is a planned permanent site for control of major fires in our area. In next week's issue we will bring you more details on this facility.

McCumber Dam [illegible] (All other buckets contained Battle Creek Reservoir water.)

Photo by Jeff Seeley

---YEAR ROUND---
BOOKKEEPING SERVICE
INCOME TAX PREPARATION
NOTARY PUBLIC

Karen Morris
Route 2, Box 688
Shingletown, CA 96088

916-474-3894

Confidential & Personal
Since 1962

RRN HAS AT LEAST TWO GOOD SUBSCIBERS AND THEY DON'T EVEN LIVE IN SHINGLETOWN!

Each month, the RRN sends out postcards to out of town subscibers telling them that their subscription is nearly up and urging them to renew if they wish. This month the postcards went out and we received back a check for $84 to pay for two subscriptions for 3 months each! Enclosed with the check was the postcard that they had received.

We were really puzzled at the large amount until we re-read the card we had sent. "Your subsciption will be up at the end of the month. Subscriptions are $14 a month. Please re-new now and don't miss an issue. Thank you."

We quickly sent the check back with a letter profusely thanking them for their "above and beyond" support! It IS rewarding to know that there are people out there that think so much of the RRN that they'd even consider $14 a month for a weekly paper! Thanks so much to Portola Valley and Mill Valley.

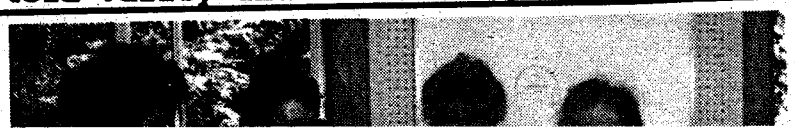

SCHOOL SERVICES GET GOOD MARKS
(Re-print from Record Searchlight-9/2/88-Pg.A7)

A state investigator has found three of four complaints involving the schooling of a Shingletown girl with learning disabilities unfounded.

Clyde Chantry said today the Shasta County Special Education Local Planning Agency (SELPA) has not regularly held community advisory council meetings as it should.

But he said three other allegations made by Shingletown resident Mike Kelley, who claimed SELPA had not met its obligation to provide state-required services for the children with learning disabilities, were not substantiated.

"They (SELPA) have been kind of lax in holding their community advisory council meetings, and we told them to do better with that," he said. "That's basically the only thing we found"

Mrs. Kelley's daughter attended Black Butte Elementary School from fifth to eight grade, but Mrs. Kelley said the child's reading skills are at the second-grade level. The girl had been diagnosed as having learning disabilities when she entered the school, and at the time read about one year below her class.

Mrs. Kelley said today (Friday, 9/2/88) she is trying to discover whether there is an avenue she can take to appeal the state's findings.

"I'm not a lawyer, I'm a parent, a frustrated parent," she said.

She plans to appear before the county Board of Education with other individuals having similar concerns. "We're going to make the board aware of our concerns and problems and ask how to solve them," she said.

DO YOU SUPPOSE THAT SHINGLETOWN COULD HAVE IT'S OWN LIBRARY?

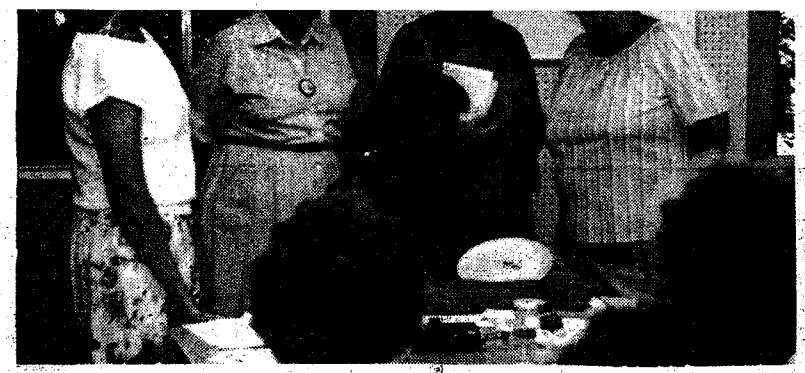

SHINGLETOWN CHINA PAINTERS
LEARN FROM FINNISH TEACHER

The Porcelain Painters in the Pines hosted a demonstration, Tuesday-August 30, on the fine art of Meissen (Dresden) china painting. The event was held at Pearl Nickerson's Oyster House in Shasta Forest Village.

Conducting the class was Finland's master porcelain painter Ole Lindgren of Helsinki. Mr. Lindgren is on his first visit to the U.S. and has already demonstrated Meissen painting techniques to Californians in Los Angeles and

This last week, the RRN received a call from Bob Dodson of Mt. Bob's Trading Post. He would like to donate a whole batch of hardback books, around $15,000 worth, to a Shingletown Library. This sounds as if it could be a worthwhile effort for some group in our community to undertake.

We did some brainstorming in the office and came up with some possible ideas. The library cards could be sold for a yearly "subscription", it could be open at least one night a week for our students to do research, it could be staffed with willing senior citizens, it would be a good place to pass our hardback books on to other readers, and it could be a non-profit organization. Or maybe it could be organized as a "stock holding" type of endeavor.

Ridge Rider News 9-5-88

CONCERNING A BUNCH OF HILLBILLYS AND A MISERABLE LITTLE PUDDLE: The "hillbillys" being all of us and the "miserable little puddle" being McCumber - I received a phone call asking the RRN to meet with PG&E. My secretary and I went down to Manton and met with Mr. Pahland (Area Manager) and two PG&E employees, on their turf.

DISCUSSION & PG&E ANSWERS:

Results: There IS an Eagle-Study in progress being done by a man employed by PG&E.
Results: The lack of snow-pack this last winter is why we don't have water in McCumber.
Results: The dyking and the fish kill are two separate issues.
Results: It's costly to dredge lakes. The weeds don't hurt the fish. Cal Trout is against it.
Results: PG&E has not violated their FERC agreement.
Results: Most people, up here, are not concerned with McCumber. Only the ones with vested interest such as property and stream.
Results: Battle Creek Reservoir level is set by the state and it is at maximum now.
Results: Mother Nature wasn't kind and if the gate is closed too much, PG&E might go under the Federal minimum and be fined.
Results: PG&E pays for some fish planting but probably not in McCumber.
Results: PG&E owns the lake and the property.

THE MAIN QUESTION - Will the people have a chance to protest further should you decide to build a dyke across the inlet area? Results?: Can not answer that question, will not answer that question, probably not (if the company has anything to say about it).

A MEMBER OF THE HILLBILLY-CLAN POINT OF VIEW (RRN)

FEELINGS & THOUGHTS: A very difficult meeting. "You" are just a woman and what can you know. How dare you think anything but positive about anything PG&E does. You should feel that PG&E is doing a good job and accommodating the public with reasonable cost for their service. (I may get my power turned off?) How dare you take up valuable time concerning such a minor problem. You don't know a thing. If they own the land, don't they have the right to do as they see fit with it and the water?
RESULTS: How the hell did I get involved with this?
ANSWER: I stared a newspaper. When I did, I vowed to cover issues that were of concern to memberrs of this community. I did not think that they would ALL be easy. This one isn't. (Where were you, Fred B.?)
MY SUMMARY: No, PG&E, you don't have the right to do what you want with OUR water. You are in a guardian role and guardians of a nation's resources have a responsibility to the people they serve. Each and every hillbilly on this mountain has equal rights to disagree with you and stand up for what they see as their rights. And the RRN shall continue to voice the people's opinions in its pages. And, you may even get some editorial opinions because I am a member of this community, too. And I refuse to be intimidated by anyone or any issue. (If in doubt, talk to Mr. Wright! If you can find him.)
SUNDAY AFTERNOON AT McCUMBER: Yesterday, I sat watching the fire as it ate its way across the mountain. Earlier, on the scanner, it was not recommended that water try to be taken from McCumber by helicopter. After an extremely hot flare-up, one did dip 1 (one) bucket out of the lake. (See front page-taken by Jeff Seeley who just happened to be ready!) Guess the pilot didn't think much of the weeds and muddy bottom waiting to catch him, because he didn't come back & it would have been closer. Point Made...

MCCUMBER LAKE WATER RELEASES

Date of	Time of	Rainfall Measure	Scale	Discharge C.F.S.	Depth At Dam	Distance Below Spillway
7/30	5:00 P.M.	.00	.49	.5836	13.15	55 3/8 "
More Pictures						
7/31	9:30 A.M.	.00	.49	.5836	13.50	51 1/8 "
8/1	7:00 P.M.	.00	.49	.5836	13.90	46 1/8 "
8/2	8:00 A.M.	.00	.49	.5836	14.10	44 7/8 "
8/3	8:00 A.M.	.00	.49	.5836	14.10	44 7/8 "
8/4	9:30 A.M.	.00	.49	.5836	14.10	44 7/8 "
8/5	8:00 A.M.	Trace	.49	.5836	13.90	46 1/8 "
8/6	8:00 A.M.	.10	.49	.5836	13.85	46 5/8 "
8/7	10:30 A.M.	.00	.49	.5836	13.80	47 1/4 "
8/8	9:00 A.M.	.00	.49	.5836	13.75	47 3/4 "
8/9	8:00 A.M.	.00	.49	.5836	13.70	48 1/2 "
8/10	8:00 A.M.	.00	.49	.5836	13.65	49 1/8 "
8/11	9:00 A.M.	.00	.49	.5836	13.60	49 5/8 "
8/12	10:00 A.M.	.00	.49	.5836	13.50	51 1/8 "
8/13	4:30 P.M.	.00	.49	.5836	13.40	52 1/4 "
8/14	7:00 P.M.	.00	.48	.3564	13.30	54 "
8/15	7:30 P.M.	.00	.48	.3564	13.25	54 3/8 "
8/16	9:30 A.M.	.00	.48	.3564	13.20	55 "
8/17	12:30 P.M.	.00	.48	.3564	13.20	55 "
8/18	7:00 P.M.	.00	.48	.3564	13.10	55 7/8 "
8/19	8:00 P.M.	.00	.48	.3564	13.05	56 1/2 "
8/20 Was not here - truck ran off Battle Creek Bridge						
8/21 " " "" " " " " " "						
8/22	8:00 A.M.	.00	.48	.3564	12.80	59 1/4 "
8/23	9:00 A.M.	.00	.48	.3564	12.75	59 7/8 "
8/24	8:00 A.M.	.00	.48	.3564	12.60	61 5/8 "
8/25	6:00 P.M.	.00	.46	0-3/10 V-notch	12.50	63 1/8 "
8/26	6:00 P.M.	.00	.46	0-3/10 V-notch	12.45	63 5/8 "
8/27	6:00 P.M.	.00	.46	0-3/10 V-notch	12.40	64 1/4 "
8/28	7:00 A.M.	.00	.46	0-3/10 V-notch	12.40	64 1/4 "
8/29	5:00 P.M.	.00	.46	0-3/10 V-notch	12.35	64 7/8 "
8/30	5:00 P.M.	.00	.46	0-3/10 V-notch	12.30	66 "
8/31	11:00 A.M.	.00	.46	0-3/10 V-notch	12.25	66 3/8 "
9/1	11:00 A.M.	.00	.47	.1647	12.20	66 7/8 "
9/2	11:30 A.M.	.00	.47	.1648	12.15	67 3/8 "
9/3	10:00 A.M.	.00	.48	.3564	12.10	67 7/8 "
9/4	9:00 A.M.	.00	.48	.3564	12.07	68 1/8 "
9/5	9:00 A.M.	.00	.48	.3564	12.05	69 3/8 "
9/6	11:00 A.M.	.00	.47	.1648	12.03	69 5/8 "
9/7	9:00 A.M.	.00	.47	.1648	12.00	69 3/4 "

BATTLE CREEK RESEVOIR

					Above Spillway	From Top of Boards
7/31 More Pict.	7:00 P.M.	.00	.90	13.6348	4 "	56 "

McCUMBER LAKE WATER RELEASES
PAGE TWO

Date of	Time of	RainfaLL Measure	Scale	Discharge C.F.S.	Depth At Dam	Distance BelowSpillway
7/17	4:00 p.m.	.00	.54	2.2275	14.20	42 7/8 "
7/18	3:00 p.m.	.00	.54	2.2275	14.05	44 ½ "
7/19	1:30 p.m.	.00	.54	2.2275	13.90	46 1/8 "
7/20	3:00 p.m.	.00	.54	2.2275	13.70	48 ½ "
7/21	1:00 p.m.	.00	.54	2.2275	13.50	51 1/8 "
7/22	3:30 p.m.	.00	.54	2.2275	13.30	54 "
7/22	NOTIFIED 7R News ---Story done -- see video					
7/23	4:00 p.m.	.00	.53	1.8468	13.15	55 3/8 "
7/24	8:00 p.m.	.00	.53	1.8468	13.05	56 ½ "
7/24	Have taken pictures of Weir and the Scale @ McCumber Res Below top of boards in Spillway					
7/25	1:00 p.m.	.00	.53	1.8468	13.00	57 1/8 "
7/26	10:00 a.m.	.00	.49	.5886	12.90	58 ¼ "
7/27	8:00 a.m.	trace	.48	.3564	12.90	58 ¼ "
7/27	MORE PICTURES					
7/28	8:00 a.m.	.00	.47	.1647	12.85	58 3/4 "
7/28	MORE PICTURES					
7/29	7:00 a.m.	.00	.47	.1647	12.80	59 ¼ "

BATTLE CREEK RESEVOIR

					Below Top Boards in Spill
7/24	7:00 p.m.	.00	.26	2.9529	27 "
7/28	11:00 a.m.	.00	.26	2.9529	34 "

CHART OF WATER RELEASES AT McCUMBER LAKE
From 5/26/88 to 7/29/88
DOCUMENTED BY DOUG DIEHL

Date Of	Time Of	Rainfall Measure	Scale	Discharge C.F.S.	Depth At Dam	Distance BelowSpillway
5/26	3:30 p,m.	.20	.52	1.4904	16.2	18 7/8"
5/27	4:30 p.m.	.01	.52	1.4904	16.2	18 7/8"
5/28	4:00 p.m.	2.27	.52	1.4904	16.3	17 "
5/29	4:00 p.m.	.02	.53	1.8468	16.3	17 "
5/30	4:00 p.m.	.00	.52	1.4904	16.35	16 ½ "
5/31	12:00 p.m.	.05	.53	1.8468	16.35	16 ½ "
6/1	1:10 p.m.	.02	.53	1.8468	16.35	16 ½ "
6/2	6:10 p.m.	.00	.53	1.8468	16.25	18 "
6/3	4:00 p.m.	.00	.52	1.4904	16.25	18 "
6/4	4:30 p.m.	.10	.52	1.4904	16.20	18 3/4 "
6/5	5:00 p.m.	.41	.53	1.8468	16.20	18 3/4 "
6/6	6:00 p.m.	.21	.54	2.2275	16.25	18 "
6/7	11:00 a.m.	.68	.54	2.2275	16.25	18 "
6/9	11:15 a.m.	.10	.53	1.8468	16.1	20 "
6/10	12:15 p.m.	.03	.53	1.8468	16.1	20 "
6/11	1:00 p.m.	.00	.53	1.8468	16.1	20 "
6/12	2:00 p.m.	.00	.53	1.8468	16.0	21 1/8 "
6/13	3:10 p.m.	.00	.52	1.4904	16.0	21 1/8 "
6/14	2:00 p.m.	.00	.53	1.8468	16.0	21 1/8 "
6/15	3:00 p.m.	.00	.53	1.8468	16.0	21 1/8 "
6/16	3:00 p.m.	.00	.53	1.8468	16.0	21 1/8 "
6/17	3:30 p.m.	.00	.53	1.8468	16.0	21 ½ "
6/18	12:15 p.m.	.00	.52	1.4904	15.9	22 ¼ "
6/19	5:00 p.m.	.00	.52	1.4904	15.9	22 ½ "
6/20	6:00 p.m.	.00	.52	1.4904	15.9	22 ½ "
6/21	10:00 a.m.	.00	.51	1.161	15.9	22 3/4 "
6/22	10:30 a.m.	.00	.52	1.4904	15.95	22 1/8 "
6/22	P.G. and E. cleaned moss from weir					
6/23	12:20 p.m.	.00	.52	1.4904	15.85	23 ¼ "
6/24	10:30 a.m.	.00	.52	1.4904	15.80	23 ½ "
6/25	9:00 a.m.	.00	.51	1.161	15.75	24 "
6/26	10:30 a.m.	.00	.52	1.4904	15.73	24 ¼ "
6/27	3:35 p.m.	.00	.52	1.4904	15.70	24 ½ "
6/28	7:00 p.m.	.00	.53	1.8468	15.65	25 ¼ "
6/29	5:00 p.m.	.00	.53	1.8468	15.55	26 3/8 "
6/30	11:00 a.m.	.00	.52	1.4904	15.50	27 "
7/1	10:30 a.m.	.00	.52	1.4904	15.50	27 1/8 "
7/2	10:00 a.m.	.00	.52	1.4904	15.45	27 7/8 "
7/3	2:00 p.m.	.00	.52	1.4904	15.40	28 ½ "
7/4	3:00 p.m.	.00	.52	1.4904	15.35	29 ¼ "
7/5	3:30 p.m.	.00	.52	1.4904	15.30	30 "
7/6	3:00 p.m.	.00	.52	1.4904	15.25	30 ½ "
7/7	4:00 p.m.	.00	.52	1.4904	15.20	30 3/4 "
7/8	2:00 p.m.	.00	.52	1.4904	15.10	32 "
7/9	3:00 p.m.	.00	.52	1.4904	15.00	33 1/8 "
7/10	4:00 p.m.	.00	.52	1.4904	14.90	34 ¼ "
7/11	6:00 p.m.	.00	.52	1.4904	14.80	35 ½ "
7/12	5:00 p.m.	.00	.52	1.4904	14.70	37 ½ "
7/13	3:00 p.m.	.00	.54	2.2275	14.60	38 5/8 "
7/14	5:00 p.m.	.00	.54	2.2275	14.50	39 ½ "
7/15	1:00 p.m.	.00	.54	2.2275	14.40	40 ½ "
7/16	3:00 p.m.	.00	.54	2.2275	14.30	42 "

MCCUMBER WEIR
Constructed below the dam to measure water discharge

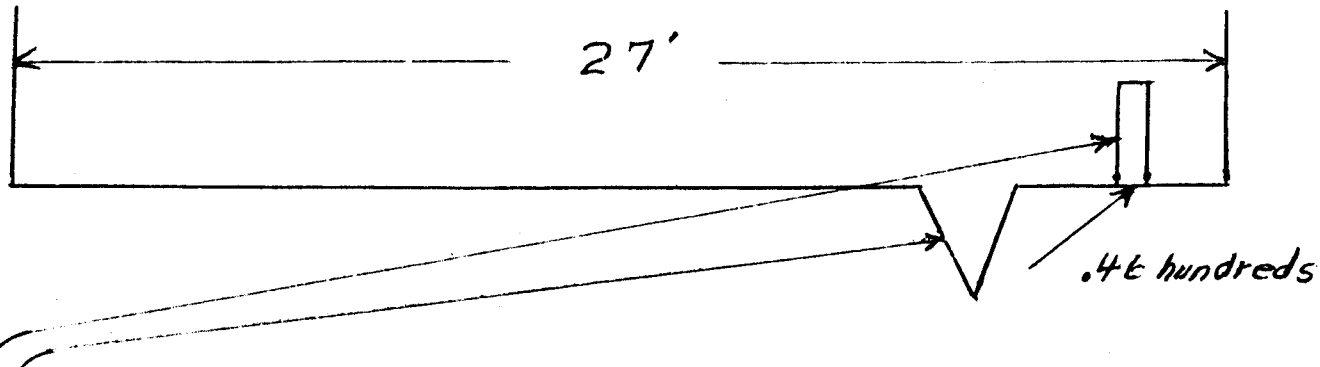

DESCRIPTION

3/10 V-notch = the amount of water that is supposed to flow according to the F.E.R.C. Agreement.

Scale = Calibrated in one-hundreds of an inch. On the scale, .46 hundreds is even with the top of the weir. Anything above this is in excess of the F.E.R.C. Agreement.

Credentials: Learned from C. Victor (Vic) Scammond (State Watermaster, retired), California State Department of Water Resources.

Federal Energy Regulatory Commission: After September 10th, the P.G.&E. can discharge whatever they want, according to the F.E.R.C. Agreement, so I will start taking water discharges in March of 1989, and will forward them to you.

Douglas W. Diehl

Douglas W. Diehl

STATE WATER RESOURCES CONTROL BOARD
DIVISION OF WATER RIGHTS

P.O. BOX 2000 SACRAMENTO, CA 95812-2000
(916) 657-1875

SUPPLEMENTAL STATEMENT OF WATER DIVERSION AND USE

DIVERTER OF RECORD:

STATEMENT NO: 000831

PACIFIC GAS AND ELECTRIC COMPANY
C/O MANAGER, HYDRO GENERATION
PO BOX 770000 P10A
SAN FRANCISCO, CA 94177

TELEPHONE NUMBER:
(415) 973-4603

IF NAME/ADDRESS/PHONE NO. IS WRONG OR MISSING, PLEASE CORRECT..

SOURCE: NORTH BATTLE CREEK

TRIBUTARY TO: BATTLE CREEK

COUNTY: SHASTA

YEAR OF FIRST USE: 1909

DIVERSION
WITHIN: SW1/4 OF NE1/4 SECTION 15, T31N, R02E, MDB&M

COMPLETE AND RETURN THIS FORM BY JULY 1, 1994 .

A. Water is used under: Riparian claim _____ ; Pre 1914 right x ; Other (explain) _____

B. Year of first use (Please provide if missing above) _____ .

C. Amount of use - Enter the amount of water used each month. If monthly and annual use are not known, check the months in which water was used.

Amounts below are : ☐ Gallons ☒ Acre-feet ☐ (other) _____

*** End of month storage (Macumber Reservoir) ***

	JAN.	FEB.	MAR.	APR.	MAY	JUNE	JULY	AUG.	SEP.	OCT.	NOV.	DEC.	TOTAL ANNUAL
1991	171	266	266	420	411	309	191	122	103	110	103	103	----
1992	134	299	403	411	327	229	143	61	63	114	212	247	----
1993	126	89	445	445	462	428	411	372	224	306	134	110	----

D. Purpose of use - Specify number of acres irrigated, stock watered, persons served, etc.
Irrigation _____ acres; stock watering _____ ; Domestic _____
Other (specify) Generation at Volta I, Volta II, South, Inskip, & Coleman Powerhouses.

E. Changes in method of Diversion - Describe any changes in your project since your previous statement was filed. (New pump, enlarged diversion dam, location of diversion, etc.)

F. If part of the water listed in Part C consists of reclaimed or polluted water, please indicate the annual amounts of reclaimed or polluted water in the space below.

I declare under penalty of perjury that the information in this report is true to the best of my knowledge and belief.

DATED: October 7 , 19 94 , at San Francisco , California

Signature: Shan Bhattacharya

J RR

WR 40-I (1/94)
FOR0127R3

3714

1993

STATE OF CALIFORNIA
STATE WATER RESOURCES CONTROL BOARD
Division of Water Rights

P.O. BOX 2000 SACRAMENTO, CA 95812-2000
901 P ST. SACRAMENTO, CA 95814
(916) 322-4503
(910) 324-5076

SUPPLEMENTAL STATEMENT OF WATER DIVERSION AND USE

DIVERTER OF RECORD: STATEMENT NO: 000831

PACIFIC GAS & ELECTRIC COMPANY
C/O MANAGER, HYDRO GENERATION
245 MARKET STREET, ROOM 518
SAN FRANCISCO, CA 94106

TELEPHONE NUMBER:
(415) 972-5310

IF NAME/ADDRESS/PHONE NO. IS WRONG OR MISSING, PLEASE CORRECT.

SOURCE: NORTH BATTLE CREEK

TRIBUTARY TO: BATTLE CREEK

COUNTY: SHASTA

DIVERSION
WITHIN: SW1/4 OF NE1/4 SECTION 15, T31N, R02E, MDB&M.

INSTRUCTIONS: Please complete Items A. B and C. Item D should be completed if you replaced all or part of your regular water supply with reclaimed or polluted water. RETURN THIS FORM BY JULY 1, 1991. (Additional information on reverse side of this form.)

A. Amount of Use - Fill in the amount of water used each month. If monthly and annual use are not known, check the months in which water was used.

Amounts below are: ☐ Gallons ☒ Acre-feet ☐ _____ (other)

End of month storage (Macumber Reservoir)

	Jan.	Feb.	Mar.	Apr.	May	June	July	Aug.	Sept.	Oct.	Nov.	Dec.	Total Annual
1988	299	186	299	313	286	247	147	92	110	89	212	139	-----
1989	191	292	445	428	379	272	235	201	134	130	107	95	-----
1990	99	171	387	372	428	364	260	186	166	171	107	99	-----

B. Purpose of Use - Specify number of acres irrigated, stock watered, persons served, etc.

Irrigation _____

Stockwatering _____

Domestic _____

Other (specify) Generation at Volta I, Volta II, South, Inskip & Coleman Powerhouses.

C. Changes in Method of Diversion - Describe any changes in your project since your previous statement was filed. (New pump, enlarged diversion dam, location of diversion, etc.)

None

D. If part of the water listed in Part A consists of reclaimed or polluted water, please indicate the annual amounts of reclaimed or polluted water in the space below.

I declare under penalty of perjury that the information in this report is true to the best of my knowledge and belief.

DATED: JUN 28 1991, 19 ____, at San Francisco, California

Signature: Thomas A. Jurk

WR 40-I (2/90)

3515 1990

GENERAL INFORMATION PERTAINING TO WATER RIGHTS IN CALIFORNIA

There are two principal types of surface water rights in California. They are riparian and appropriative rights.

A riparian right enables an owner of land bordering a natural lake or stream to take and use water on his riparian land. Riparian land must be in the same watershed as the water source and must never have been severed from the source of supply by an intervening parcel without reservation of the riparian right to the severed parcel. Generally, a riparian water user must share the water supply with other riparian users. Riparian rights may be used to divert the natural flow of a stream but may not be used to store water for later use or to divert water which originates in a different watershed, or return flows from use of groundwater.

An appropriative right is required for use of water on nonriparian land and for storage of water. Generally, appropriative rights may be exercised only when there is a surplus not needed by riparian water users. Since 1914 new appropriators have been required to obtain a permit and license from the State.

Statements of Water Diversion and Use must be filed by riparian and pre-1914 appropriative water users. The filing of a statement (1) provides a record of water use, (2) enables the State to notify such users if someone proposes a new appropriation upstream from their diversion, and (3) assists the State to determine if additional water is available for future appropriators.

The above discussion is provided for general information. For more specific information concerning water rights, please contact an attorney or write to this office. We have several pamphlets available. They include:

"Statements of Water Diversion and Use"
"Information Pertaining to Water Rights in California"
"Water Rights for Stockponds Constructed Prior to 1969"
"Appropriation of Water in California"

ADDRESS CHANGE OR NAME CHANGE

STATEMENT

S 831

New Name or Address Change:

Pacific Gas and Electric Company
Manager, Hydro Generation
245 Market Street, Room 518
San Francisco, CA 94106

STATE OF CALIFORNIA
THE RESOURCES AGENCY
STATE WATER RIGHTS BOARD

S 831

STATEMENT OF WATER DIVERSION AND USE

This statement should be typewritten or legibly written in ink.

A. Name of person diverting water: Pacific Gas and Electric Company
Address: 245 Market Street, San Francisco, California 94106

B. Name of body of water at point of diversion: North Battle Creek
Tributary to: Battle Creek

C. Place of diversion: SW ¼ NW ¼ Section 21, Township 32N, Range 3E, MD B&M, Shasta County, or locate it on sketch of section grid on reverse side with regard to section lines or prominent local landmarks.

D. Name of works: Macumber Reservoir

E. Capacity of diversion works: _____ cubic feet per second / gallons per minute / gallons / acre feet

Capacity of storage reservoir: 430 in storage at month end, acre feet

State quantity of water ~~used each month in gallons or acre feet~~

Year	Jan.	Feb.	Mar.	Apr.	May	June	July	Aug.	Sept.	Oct.	Nov.	Dec.	Total Annual
1966	228	5	438	438	438	258	222	175	326	24	55	89	2696

If monthly and annual use are not known, check months in which water was used. State extent of use in units, such as acres of each crop irrigated, average number of persons served, number of stock watered, etc. _____

Maximum annual water use in recent years _____ gallons / acre-feet

Minimum annual water use in recent years _____ gallons / acre-feet

Type of diversion facility: gravity _____, pump _____

Method of measurement: weir _____, flume _____, electric power meter _____, water meter _____, estimate _____

F. Purpose of use (what water is being used for): Generation of electric energy

G. General description or location of place of use (use sketch of section grid on reverse side if you desire): Battle Creek hydro electric plants

H. Year of first use as nearly as known: 1909

I. Name of person filing statement: Hugh R. Daniels
Position: Manager - Hydro Generation Dept. Organization: Pacific Gas and Electric Company
Address: 245 Market Street, San Francisco, California 94106

I certify that the foregoing statements are true and correct to the best of my knowledge and belief.

Date signed: JUN 5 1967

Signature: Hugh R. Daniels

See Instructions on Reverse Side