U.S. ARMY CORPS OF ENGINEERS - SAN FRANCISCO DISTRICT
IN COOPERATION WITH
SANTA CLARA VALLEY WATER DISTRICT

UPPER BERRYESSA CREEK FLOOD RISK MANAGEMENT PROJECT

SANTA CLARA COUNTY, CALIFORNIA

CONFORMED DRAWINGS
AUGUST 4, 2016

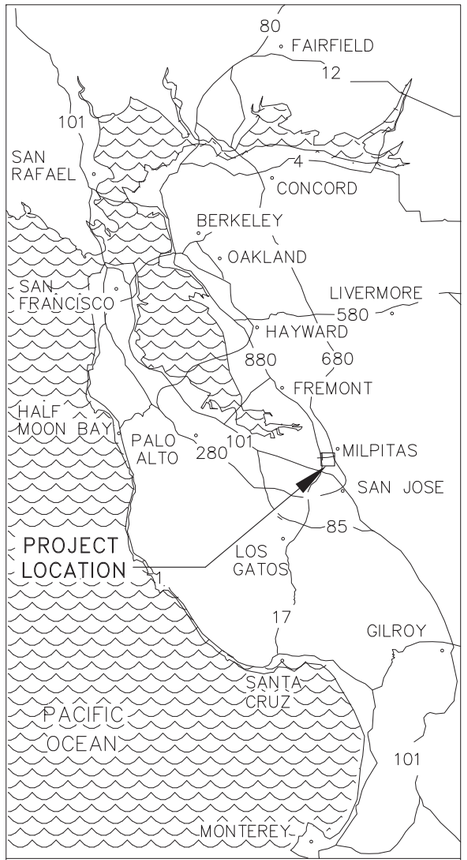

VICINITY MAP

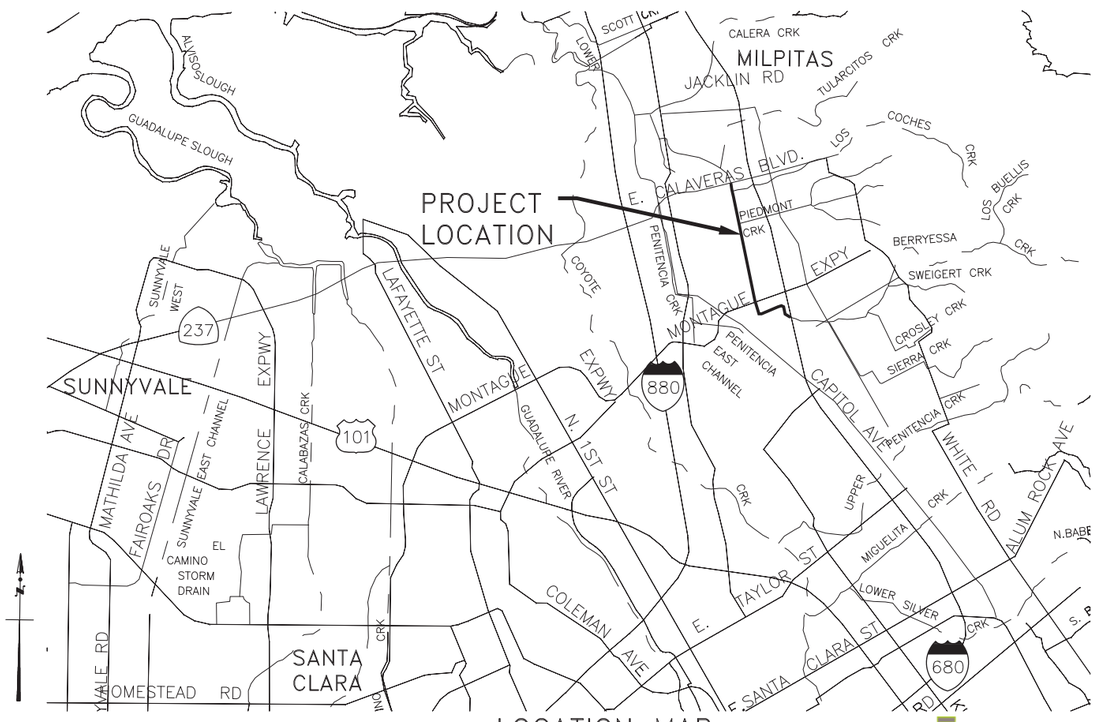

LOCATION MAP
1"=5,000'

REGISTERED PROFESSIONAL ENGINEER
ARIC TORREYSON
NO. 66068
EXP. 6-30-18
CIVIL
STATE OF CALIFORNIA

US Army Corps of Engineers
San Francisco District
1455 Market Street
San Francisco, CA 94103

TETRA TECH
17885 VON KARMAN AVE.,
SUITE 500
IRVINE, CA 92614
Phone: (949) 809-5000

Mark	Description	Date	Appr.

DESIGNED BY: AMT
CHECKED BY: YHC
DRAWN BY: AWG
DATE: 8-4-2016
SHEET NO. 1 of 71
DRAWING NO. 78 34 8

SUBMITTED:
Chief, Civil Design Section
APPROVAL RECOMMENDED:
Chief, Engineering Branch
APPROVED:
Chief, Engineering & Technical Services

PREPARED UNDER THE DIRECTION OF
JOHN C. MORROW
LT. COLONEL, C.E., DISTRICT COMMANDER

SANTA CLARA COUNTY, CALIFORNIA
UPPER BERRYESSA CREEK FLOOD RISK MANAGEMENT PROJECT

TITLE SHEET

Sheet reference number
G-01

USA NORTH 811
Call 811 Before You Dig

P:\Watr\T31331 Berryessa Design SCVWD\11 Design\01 Final Design\Sheets\ G-01-Title.dwg 02 Aug 2016 - 6:08pm

CONFORMED DRAWING

INDEX TO CONTRACT DRAWINGS

GENERAL SHEETS
G-01 TITLE SHEET
G-02 SHEET INDEX, ABBREV., & LEGEND
G-03 GENERAL NOTES
G-04 SHEET LAYOUT
G-05 HORIZONTAL CHANNEL CONTROL & ROW – STA. 87+21.43 TO STA. 113+00.00
G-06 HORIZONTAL CHANNEL CONTROL & ROW – STA. 113+00.00 TO STA. 140+00.0
G-07 HORIZONTAL CHANNEL CONTROL & ROW – STA. 140+00.00 TO STA. 167+00.00
G-08 HORIZONTAL CHANNEL CONTROL & ROW – STA. 167+00.00 TO STA. 201+34.17

CIVIL SHEETS
C-100 PLAN AND PROFILE – STA. 86+00.00 TO STA. 96+00.00
C-101 PLAN AND PROFILE – STA. 96+00.00 TO STA. 106+00.00
C-102 PLAN AND PROFILE – STA. 106+00.00 TO STA. 116+00.00
C-103 PLAN AND PROFILE – STA. 116+00.00 TO STA. 126+00.00
C-104 PLAN AND PROFILE – STA. 126+00.00 TO STA. 136+00.00
C-105 PLAN AND PROFILE – STA. 136+00.00 TO STA. 146+00.00
C-106 PLAN AND PROFILE – STA. 146+00.00 TO STA, 156+00.00
C-107 PLAN AND PROFILE – STA. 156+00.00 TO STA. 166+00.00
C-108 PLAN AND PROFILE – STA. 166+00.00 TO STA. 176+00.00
C-109 PLAN AND PROFILE – STA. 176+00.00 TO STA. 186+00.00
C-110 PLAN AND PROFILE – STA. 186+00.00 TO STA. 195+00.00
C-111 PLAN AND PROFILE – STA. 195+00.00 TO STA. 206+00.00
C-112 PLAN AND PROFILE – PIEDMONT AND LOS COCHES CHANNELS
C-200 TYPICAL CROSS SECTIONS & DETAILS (1)
C-201 TYPICAL CROSS SECTIONS & DETAILS (2)
C-202 DETAILS – CHANNEL CROSSINGS
C-203 CROSS SECTIONS – STA. 88+00.00 TO STA. 96+00.00
C-204 CROSS SECTIONS – STA. 97+00.00 TO STA. 105+00.00
C-205 CROSS SECTIONS – STA. 106+00.00 TO STA. 114+00.00
C-206 CROSS SECTIONS – STA. 115+00.00 TO STA. 123+00.00
C-207 CROSS SECTIONS – STA. 124+00.00 TO STA. 132+00.00
C-208 CROSS SECTIONS – STA. 133+00.00 TO STA. 141+00.00
C-209 CROSS SECTIONS – STA. 142+00.00 TO STA. 150+00.00
C-210 CROSS SECTIONS – STA. 151+00.00 TO STA. 159+00.00
C-211 CROSS SECTIONS – STA. 160+00.00 TO STA. 168+00.00
C-212 CROSS SECTIONS – STA. 169+00.00 TO STA. 177+00.00
C-213 CROSS SECTIONS – STA. 178+00.00 TO STA. 186+00.00
C-214 CROSS SECTIONS – STA. 187+00.00 TO STA. 191+00.00
C-300 EROSION CONTROL BLANKET DETAILS
C-301 PIPE OUTLET – DETAILS
C-302 RIPRAP PROTECTION – DETAILS
C-303 FENCE AND GATE – DETAILS
C-304 MISC. DETAILS
C-305 PIEDMONT CREEK JUNCTION CHANNEL IMPROVEMENTS
C-306 LOS COCHES CREEK JUNCTION CHANNEL IMPROVEMENTS
C-307 EAST CALAVERAS BLVD. AND YOSEMITE DR. DETAIL
C-308 AMES AVE. AND UPRR CROSSING DETAIL
C-309 MILPITAS BLVD. DETAIL

STRUCTURAL SHEETS
S-100 STRUCTURAL GENERAL NOTES
S-101 LOS COCHES BRIDGE MODIFICATIONS
S-102 RCB STRUCTURAL DETAILS
S-103 CHANNEL TRANSITION DETAILS
S-104 STORM DRAIN OUTLET DETAILS
S-105 FLOOD WALL DETAILS

STRUCTURAL RAILROAD
SR-100 UPRR CULVERT GENERAL PLAN & LAYOUT
SR-101 UPRR CULVERT BOX CULVERT DETAILS
SR-102 UPRR CULVERT CHANNEL TRANSITION DETAILS
SR-103 UPRR CULVERT MISCELLANEOUS DETAILS
RP-01 UPRR PLAN AND PROFILE
RP-02 UPRR TRACKS DETAIL AND SECTIONS
RP-03 UPRR TRACK CROSS SECTIONS

TRAFFIC
T-100 TRAFFIC PLAN

GEOTECHNICAL SHEETS
B-100 GEOTECHNICAL BORING LOCATION – STA. 87+21.43 TO STA. 140+00.00
B-101 GEOTECHNICAL BORING LOCATION – STA. 140+00.00 TO STA. 181+00.00
B-102 GEOTECHNICAL BORING LOCATION – STA. 181+00.00 TO STA. 201+34.17
B-103 GEOTECHNICAL BORING LOG
B-104 GEOTECHNICAL BORING LOG
B-105 GEOTECHNICAL BORING LOG
B-106 GEOTECHNICAL BORING LOG
B-107 GEOTECHNICAL BORING LOG
B-108 GEOTECHNICAL BORING LOG
B-109 GEOTECHNICAL BORING LOG
B-110 GEOTECHNICAL BORING LOG

REGISTERED PROFESSIONAL ENGINEER
ARIC TORREYSON
NO. 66068
EXP. 6-30-18
CIVIL
STATE OF CALIFORNIA

LEGENDS AND SYMBOLS

- X — PROPOSED FENCE
- X — EXISTING FENCE
- G — GAS
- OHW — OVERHEAD UTILITY
- T — TELEPHONE
- E — ELECTRIC
- W — WATER
- SD — STORM DRAIN
- S — SANITARY SEWER
- FOC — FIBER OPTIC CABLE
- CENTERLINE
- EXISTING FEATURE
- ABANDONED IN PLACE
- CONTOUR GRADE LINE
- RIPRAP
- CONCRETE
- SOIL
- EXISTING RAILROAD TRACKS
- HTRW LIMIT
- RIGHT OF WAY (ROW)
- CONTROL LINE
- (1) CONSTRUCTION NOTE
- TEMPORARY CONSTRUCTION EASEMENT (TCE)
- SCVWD EASEMENT (SHEETS G-05 TO G-08)
- UPRR FEE WITH SCVWD EASEMENT (SHEETS G-05 TO G-08)
- UPRR EASEMENT ACQUISITION (SHEETS G-05 TO G-08)
- TEMPORARY STAGING AREA
- TREE MITIGATION AREA

- WATER SURFACE
- CONTROL LINE
- SLOPE
- FIRE HYDRANT
- VALVE
- STORM DRAIN INLET
- CO CLEAN OUT
- AIR VACUUM VALVE
- MANHOLE
- REDUCER
- PLUG/ END OF PIPE
- PRESSURE REGULATOR VALVE
- VACUUM BLOWOFF VALVE
- CPS CORROSION PROTECTION SYSTEM
- CTS CORROSION TEST STATION
- WQS WATER QUALITY SAMPLE STATION
- M WATER METER
- RP REDUCED PRESSURE BACKFLOW DEVICE
- DC DOUBLE-CHECK BACKFLOW DEVICE
- UTILITY POLE
- STORM DRAIN OUTFALL
- SANITARY SEWER FLUSHING INLET
- SIGN
- TREE STUMP
- FLAG POLE
- ELECTRICAL ILLUMINATION
- TRAFFIC SIGNAL
- UTILITY
- VAULT
- POST
- POLE ANCHOR
- RAILROAD CROSS ARMS
- 985 EXISTING ELEVATION

USA NORTH 811 Call 811 Before You Dig

ABBREVIATIONS

AASHTO	AMERICAN ASSOCIATION OF STATE HIGHWAY AND TRANSPORTATION OFFICIALS
ABAND.	ABANDONED
AB	AGGREGATE BASE
ABBREV.	ABBREVATIONS
AC	ASPHALTIC CONCRETE
ACP	ASBESTOS CEMENT PIPE
ACWP	ASBESTOS CEMENT WATER PIPE
AISC	AMERICAN INSTITUTE OF STEEL CONSTRUCTION
AREMA	AMERICAN RAILWAY ENGINEERING ASSOCIATION
APPROX	APPROXIMATE
ASTM	AMERICAN SOCIETY OF TESTING AND MATERIALS
AWS	AMERICAN WELDING SOCIETY
AVE	AVENUE
B	BASE WIDTH TRAPEZOIDAL CHANNEL
BEG	BEGIN
BC	BEGIN CURVE
BLDG	BUILDING
BLVD	BOULEVARD
C	CURVE DATA
CAD	COMPUTER AIDED DRAFTING
CCP	CONCRETE CYLINDER PIPE
CL	CENTERLINE
CF	CUBIC FEET
CFS	CUBIC FEET PER SECOND
CH	CHANNEL
CIWP	CAST IRON WATER PIPE
C.J.	CONSTRUCTION JOINT
CLR	CLEAR
CMP	CORRUGATED METAL PIPE
COE	CORPS OF ENGINEERS
CONC	CONCRETE
CONST.	CONSTRUCT
COR	CONTRACTING OFFICER REPRESENTATIVE
CY	CUBIC YARD
D	DEPTH OF TRAPEZOIDAL CHANNEL
DIA	DIAMETER
DIP	DUCTILE IRON PIPE
DR	DRIVE
E	EAST, EASTING
EA	EACH
EC	END CURVE
EG	EXISTING GRADE
EL	ELEVATION
EM	ENGINEERING MANUAL
ENCASE.	ENCASEMENT
ELEC	ELECTRICAL
EOP	EDGE OF PAVEMENT
E.W.	EACH WAY
EX	EXISTING
EXPY	EXPRESSWAY
FF	FINISH FOUNDATION
FG	FINISH GRADE
FL	FLOWLINE
FS	FINISH SURFACE
FT	FEET
FWY	FREEWAY
GALV	GALVANIZED
GB	GRADE BREAK
HDPE	HIGH DENSITY POLYETHYLENE PIPE
HOR	HORIZONTAL
HT	HEIGHT
HTRW	HAZARDOUS, TOXIC AND RADIOACTIVE WASTE
INV	INVERT ELEVATION
KSI	KILOPOUND PER SQUARE INCH
L	LINE DATA
LBS	POUNDS
LF	LINEAR FEET
LT	LEFT
MAX	MAXIMUM
MH	MANHOLE
MIN	MINIMUM
MM	MILLIMETER
MWD	METROPOLITAN WATER DISTRICT
N	NORTH, NORTHING
NAD	NORTH AMERICAN DATUM
NAVD	NORTH AMERICAN VERTICAL DATUM
NO.	NUMBER
NTS	NOT TO SCALE
O.C.	ON CENTER
PED	PEDESTRIAN
PERF.	PERFORATED
PCC	POINT OF COMPUND CURVE
PG&E	PACIFIC GAS AND ELECTRIC COMPANY
PI	POINT OF INTERSECTION
PIP	PROTECT IN PLACE
PRC	POINT OF REVERSE CURVE
PROP	PROPOSED
PSI	POUND PER SQUARE INCH
PVC	POLYVINYL CHLORIDE
R	RADIUS
RCB	REINFORCED CONCRETE BOX
RCP	REINFORCED CONCRETE PIPE
RD	ROAD
RET	RETAINING
ROW	RIGHT OF WAY
RT	RIGHT
RW	RECLAIM WATER
S=	SLOPE
S	SOUTH
SCP	STEEL CASED PIPE
SCVWD	SANTA CLARA VALLEY WATER DISTRICT
SCWP	STEEL CASED WATER PIPE
SD	STORM DRAIN
SDMH	STORM DRAIN MANHOLE
SF	SQUARE FEET
SHT	SHEET
SS	SANITARY SEWER
ST	STREET
STA	STATION
STD	STANDARD
STRUCT	STRUCTURE
TBD	TO BE DETERMINED
TCE	TEMPORARY CONSTRUCTION EASEMENT
TF	TOP OF FOOTING
TRANS.	TRANSITION
TOB	TOP OF BANK
TOW	TOP OF WALL
TYP	TYPICAL
UG	UNDERGROUND
UPRR	UNION PACIFIC RAILROAD
USACE	UNITED STATES ARMY CORP OF ENGINEERS
VERT	VERTICAL
VLF	VERTICAL LINEAR FEET
VTA	VALLEY TRANSPORTATION AUTHORITY
W	WEST
WSEL	WATER SURFACE ELEVATION (100-YR)
Z	SIDE SLOPE OF TRAPEZOIDAL CHANNEL

US Army Corps of Engineers
San Francisco District
1455 Market Street
San Francisco, CA 94103

TETRA TECH
17885 VON KARMAN AVE.,
SUITE 500
IRVINE, CA 92614
Phone: (949) 809-5000

Mark	Description	Date	Appr.

DESIGNED BY: AMT
DRAWN BY: AWG
CHECKED BY: YHC
DATE: 8-4-2016
SHEET NO. 2 of 71
DRAWING NO.

SUBMITTED:
Chief, Civil Design Section
APPROVAL RECOMMENDED:
Chief, Engineering Branch
APPROVED:
Chief, Engineering & Technical Services

PREPARED UNDER THE DIRECTION OF
JOHN C. MORROW
LT. COLONEL, C.E., DISTRICT COMMANDER

SANTA CLARA COUNTY, CALIFORNIA
UPPER BERRYESSA CREEK FLOOD RISK MANAGEMENT PROJECT

SHEET INDEX, ABBREV., & LEGEND

Sheet reference number
G-02

CONFORMED DRAWING

GENERAL NOTES:

1. THE LOCATION AND ELEVATIONS OF EXISTING UTILITIES SHOWN OF THE PLANS ARE BASED ON ABOVE GROUND SURVEYS AND THE BEST AVAILABLE RECORD INFORMATION. UTILITY INFORMATION IS NOT INTENDED TO BE EXACT OR COMPLETE. NEITHER THE USACE, SCVWD, ENGINEER NOR THE CONTRACTING OFFICER CAN GUARANTEE THE ACCURACY OR COMPLETENESS OF UTILITIES SHOWN. THE CONTRACTOR SHALL CONTACT USA NORTH BY DIALING 811 AT LEAST 48 HOURS IN ADVANCE OF ANY CONSTRUCTION WORK TO ALLOW UTILITY OPERATORS TO CHECK AND MARK LOCATIONS OF EXISTING FACILITIES. THE CONTRACTOR SHALL PROTECT UTILITIES NEAR CONSTRUCTION ACTIVITIES AND COORDINATE WITH UTILITY COMPANIES FOR REMOVAL OR RELOCATION OF INTERFERING FACILITIES. THE CONTRACTOR IS RESPONSIBLE FOR COMPARING THE PLANS TO EXISTING CONDITIONS AND FOR VERIFYING ACTUAL FIELD CONDITIONS. IT SHALL BE THE CONTRACTOR'S SOLE RESPONSIBILITY TO PROTECT ALL EXISTING UTILITIES IN PLACE, UNLESS OTHERWISE NOTED OR SPECIFIED.

2. CONTRACTOR SHALL VERIFY SITE CONDITIONS AND LOCATION AND SIZE OF UNDERGROUND UTILITIES AS SHOWN ON THE DRAWINGS AND REPORT ANY DISCREPANCIES TO THE ENGINEER PRIOR TO COMMENCING WORK.

3. THE CONTRACTOR SHALL NOTIFY, IN WRITING, AND COORDINATE WITH ALL UTILITY COMPANIES AND GOVERNMENT AGENCIES PRIOR TO EXCAVATION WORK AND CALL USA NORTH PRIOR TO COMMENCING WORK.

4. CALL USA NORTH 48 HOURS IN ADVANCE PRIOR TO ALL EXCAVATION WORK.

5. FOR BORING LOGS AND OTHER GEOTECHNICAL INFORMATION, SEE PROJECT GEOTECHNICAL REPORTS BY TETRA TECH, INC. DATED APRIL 3, 2015. CONTRACTOR IS RESPONSIBLE TO OBTAIN ALL GEOTECHNICAL REPORT UPDATES.

6. CONTRACTOR IS ADVISED ADDITIONAL WORK BY OTHER CONTRACTORS WILL TAKE PLACE IN AND ALONG THE PROJECT LIMITS. CONTRACTOR IS TO COORDINATE AND COOPERATE WITH OTHER CONTRACTORS AND GOVERNING AGENCIES AS REQUIRED.

7. SITE SECURITY DURING CONSTRUCTION SHOULD CONSIST OF TEMPORARY FENCING TO BE INSTALLED AND MAINTAINED BY THE CONTRACTOR DURING THE ENTIRE CONSTRUCTION OF THE PROJECT.

8. THE CONTRACTOR SHALL COMPLY WITH ALL LOCAL, STATE AND FEDERAL REGULATIONS RELATED TO THE SAFETY OF PERSONNEL AND THE PUBLIC ON THE JOB SITE, INCLUDING APPLICABLE OCCUPATIONAL SAFETY AND HEALTH ADMINISTRATION (OSHA) REGULATIONS AND, IN PARTICULAR, THOSE DEALING WITH TRENCHING AND SHORING.

9. DURING THE COURSE OF ALL WORK ON THE PROJECT, THE CONTRACTOR SHALL ASSUME SOLE AND COMPLETE RESPONSIBILITY FOR ALL JOB SITE CONDITIONS INCLUDING SAFETY OF ALL PERSONS AND SECURITY OF ALL PROPERTY. THE CONTRACTOR SHALL SUPERVISE AND DIRECT THE WORK USING THE SKILLS AND ATTENTION UTILIZED WITHIN THE INDUSTRY. THE CONTRACTOR SHALL BE SOLELY RESPONSIBLE FOR ALL CONSTRUCTION MEANS, METHODS, TECHNIQUES, SEQUENCES AND PROCEDURES AND FOR COORDINATING ALL PORTIONS OF THE WORK UNDER THIS CONTRACT. THIS REQUIREMENT SHALL APPLY CONTINUOUSLY AND NOT BE LIMITED TO NORMAL WORKING HOURS. THE CONTRACTOR SHALL DEFEND, INDEMNIFY AND HOLD THE USACE, SCVWD AND THE ENGINEER HARMLESS FROM ANY AND ALL LIABILITY REAL OR ALLEGED, IN CONNECTION WITH THE PERFORMANCE OF THE WORK ON THIS PROJECT, EXCEPTING LIABILITY ARISING FROM THE SOLE NEGLIGENCE OF THE USACE, SCVWD OR ENGINEER.

10. DETAILS ON THE PLANS ARE INTENDED TO SHOW THE FINAL RESULT OF DESIGN. MINOR MODIFICATIONS MAY BE REQUIRED TO SUIT JOB SITE DIMENSIONS OR CONDITIONS, AND SUCH MODIFICATIONS SHALL BE INCLUDED AS PART OF THE WORK.

11. ALL BID ITEMS ARE COMPLETE IN PLACE, INCLUDING FURNISHING ALL MATERIALS, EQUIPMENT, TOOLS, INCIDENTALS, PERSONNEL AND SUPERINTENDENCE REQUIRED.

12. IF UNANTICIPATED CONDITIONS ARE ENCOUNTERED DURING THE COURSE OF CONSTRUCTION, THE CONTRACTOR SHALL IMMEDIATELY BRING THE CONDITION TO THE ATTENTION OF THE CONTRACTING OFFICER.

13. ALL REVISIONS TO THE CONTRACT DOCUMENTS SHALL BE APPROVED BY THE CONTRACTING OFFICER, IN WRITING, BEFORE ANY WORK ASSOCIATED WITH THE REVISION IS COMMENCED.

14. ALL FEES AND PERMITS REQUIRED FOR THE WORK SHALL BE OBTAINED AND PAID FOR BY THE CONTRACTOR.

15. THE CONTRACTOR SHALL LIMIT ALL CONSTRUCTION ACTIVITIES TO AREAS THAT ARE WITHIN THE RIGHTS-OF-WAYS OR EASEMENTS SHOWN ON THE PLANS.

16. ALL TRASH, RUBBLE AND DEBRIS, INCLUDING BURIED TRASH, RUBBLE AND DEBRIS ENCOUNTERED FROM BEGINNING, DURING, AND THROUGH THE CONTRACT PERFORMANCE PERIOD WITHIN THE PROJECT LIMITS SHALL BE REMOVED AND PROPERLY DISPOSED BY THE CONTRACTOR AT AN APPROVED, OFFSITE LOCATION. THE CONTRACTOR SHALL PAY ALL ASSOCIATED DUMPING OR DISPOSAL FEES.

17. THE SIZE, LOCATION AND TYPE OF ANY UNDERGROUND UTILITIES OR IMPROVEMENTS ENCOUNTERED DURING THE WORK SHALL BE ACCURATELY NOTED AND PLACED ON AS-BUILT DRAWINGS, KEPT BY THE CONTRACTOR, AND ISSUED TO THE CONTRACTING OFFICER UPON COMPLETION OF THE PROJECT.

18. LOCATIONS OF EXISTING STORM DRAINS ARE BASED ON ABOVE GROUND SURVEYS OF VISIBLE FEATURES. THE CONTRACTOR SHALL VERIFY ALL STORM DRAIN CONNECTIONS IN THE FIELD.

19. THE CONTRACTOR SHALL PERFORM EXCAVATION IN A SAFE CONDITION. THE CONTRACTOR IS SOLELY RESPONSIBLE FOR SHORING, SHEETING, OR OTHER PROTECTIVE MEASURES TO PREVENT DAMAGE TO ADJACENT PROPERTIES, STRUCTURES OR UTILITY FACILITIES.

20. TRAFFIC CONTROL SHALL BE PROVIDED AND MAINTAINED IN ACCORDANCE WITH PART VI OF THE MANUAL ON UNIFORM TRAFFIC CONTROL DEVICES (1988 EDITION, INCLUDING REVISION J, DATED SEPTEMBER 3, 1993) AS WELL AS ANY CALTRANS AND LOCAL JURISDICTION MODIFICATIONS THERETO.

21. WORK AT EXISTING AND PROPOSED BRIDGES ENTAIL LOW HEAD CLEARANCES AND CONTRACTOR SHALL PLAN ACCORDINGLY.

22. IN-CHANNEL CONSTRUCTION WORK IS NOT ALLOWED FROM CONTRACT AWARD AND NTP UNTIL MARCH 1, 2017 OR THE END OF THE RAINY SEASON AS DETERMINED/DIRECTED BY THE CONTRACTING OFFICER FROM STATION 87+21.43 TO STATION 120+00 AND FROM STATION 159+50 TO STATION 179+00. THIS IS TO LIMIT THE POTENTIAL FOR DOWNSTREAM FLOODING. WORK IN ALL OTHER AREAS IS ALLOWED ANYTIME IT IS NOT PRECLUDED BY ANY AND ALL OTHER REQUIREMENTS.

ENVIRONMENTAL CONTROL AND MAINTENANCE OF SITE CONDITIONS

1. IT SHALL BE THE CONTRACTOR'S RESPONSIBILITY TO DEVELOP A STORMWATER POLLUTION PREVENTION PLAN (SWPPP) FOR THE CONSTRUCTION AREA. SWPPP ELEMENTS AND WORK SHALL BE CONFINED WITHIN THE ROW AND/OR EASEMENT LIMITS, WITH A MINIMUM INTERIOR BUFFER OF ONE FOOT. THE SWPPP SHALL BE SUBMITTED AND APPROVED BY THE GOVERNING AGENCY PRIOR TO COMMENCEMENT OF ANY WORK ON THE PROJECT.

2. THE CONTRACTOR SHALL MAINTAIN ALL EROSION CONTROL AS REQUIRED THROUGHOUT CONSTRUCTION AND INSPECT EROSION CONTROLS ON A MINIMUM WEEKLY BASIS.

3. PRIOR TO THE BEGINNING OF ANY CONSTRUCTION PHASE THE CONTRACTOR SHALL INSTALL ALL EROSION CONTROL REQUIRED AND ADD ADDITIONAL EROSION CONTORL AS NECCESSARY IN SUBSEQUENT CONSTRUCTION PHASES. THE CONTRACTOR SHALL INSPECT ALL EROSION CONTROL AND MAKE ANY REPAIRS REQUIRED AS WELL AS CONFIRM THE INSTALLATION OF ANY ADDITIONAL EROSION CONTROL WHICH IS SPECIFIC TO ANY CONSTRUCTION PHASE.

4. THE CONTRACTOR'S STAGING AND STORAGE AREA SHALL CONFORM TO ALL EROSION CONTROL DETAILS AND SPECIFICATIONS. IF TEMPORARY DRAINAGE IS REQUIRED WITHIN THE STAGING AND STORAGE AREA IT SHALL CONFORM TO ALL EROSION CONTROL SPECIFICATIONS AND DETAILS AND APPROVED BY THE GOVERNING AGENCY PRIOR TO INSTALLATION.

5. ALL SOILS STORED WITHIN THE CONTRACTOR STAGING AND STORAGE AREA SHALL BE SURROUNDED BY SILT FENCE AND COVERED TO PREVENT WIND EROSION.

6. ALL TREE PROTECTION SHALL BE MAINTAINED AND INSPECTED THROUGHOUT CONSTRUCTION.

7. ALL DISTURBED AREAS SHALL BE LOAMED AND SEEDED AS SOON AS POSSIBLE. CONTRACTOR SHALL WATER AS REQUIRED BY CONTRACT DOCUMENTS TO ASSURE PROPER GROWTH.

8. PRECAUTIONS SHALL BE TAKEN TO PREVENT DUST FROM CONSTRUCTION OPERATIONS BECOMING A NUISANCE TO ADJACENT AREAS. SURROUNDING STREETS AND WALKWAYS SHALL BE SWEPT AND WASHED CLEAN ON A DAILY BASIS OR AS DIRECTED BY GOVERNING AGENCY. STOCKPILES AND UNSTABILIZED SURFACES SHALL BE KEPT MOIST.

9. CONTRACTOR SHALL MAINTAIN VEHICULAR AND PEDESTRIAN TRAFFIC IN ACCORDANCE WITH THE CONTRACT DOCUMENTS.

10. UPON COMPLETION OF TRENCH BACKFILLING OR OTHER INDIVIDUAL ITEMS OF CONSTRUCTION, ALL SURPLUS MATERIALS AND EQUIPMENT NO LONGER NEEDED SHALL BE IMMEDIATELY REMOVED, LEAVING THE CONSTRUCTION SITE AND SURROUNDINGS FREE AND CLEAN.

11. AFTER WORK IS COMPLETE, SEWERS, DRAINS, MANHOLES, CATCH BASINS AND OTHER STRUCTURES SHALL BE CAREFULLY CLEANED OF DIRT, BROKEN MASONARY, MORTAR AND OTHER DEBRIS AND LEFT READY FOR USE.

12. THE CONTRACTOR SHALL PROTECT ALL ADJACENT PROPERTY AND EXISTING AND NEW IMPROVEMENTS, AND SHALL PROVIDE POSITIVE CONTROL OF EARTH SPILLAGE, CONSTRUCTION WATER AND RUNOFF WATER FROM THE SITE.

13. MIGRATORY BIRD SURVEYS MUST BE CONDUCTED BY A QUALIFIED BIRD BIOLOGIST PRIOR TO ANY GROUND DISTURBANCE.

14. IF ACTIVE NESTS ARE IDENTIFIED, A 50FT BUFFER ZONE (300FT FOR RAPTORS) AROUND THE NEST WILL BE IMPLEMENTED AND NO CONSTRUCTION ACTIVITIES SHALL TAKE PLACE IN THE BUFFER ZONE WHILE THE NEST IS ACTIVE.

CONSTRUCTION PHASING

PRIOR TO THE START OF CONSTRUCTION THE CONTRACTOR SHALL:

1. INSTALL VERTICAL AND HORIZONTAL SURVEY CONTROL IN ACCORDANCE WITH THE SPECIFICATIONS. CONTRACTOR SHALL PROVIDE LOCATIONS AND ELEVATIONS OF ALL SURVEY CONTROL IN A ELECTRONIC AUTOCAD FORMAT.

2. SUBMIT PLAN OF PROPOSED CONTRACTOR STAGING AND STORAGE AREA FOR REVIEW AND APPROVAL BY GOVERNING AGENCY.

3. SUBMIT FOR APPROVAL A TRAFFIC CONTROL PLAN SHOWING HOW ALL TRUCK AND EQUIPMENT MOVEMENTS TO AND FROM THE SITE ARE TO BE ACCOMPLISHED.

4. REVIEW ALL EXISTING UTILITY INFORMATION PROVIDED IN THE CONTRACT DOCUMENTS AND CONDUCT ALL OTHER ADDITIONAL RESEARCH REQUIRED TO CONFIRM EXISTING UTILITIES. ANY DISCREPANCIES SHALL BE IMMEDIATELY REPORTED.

5. MARK OUT ALL EXISTING UTILITIES ON THE SITE AND NOTIFY EACH UTILITY OWNER OR OPERATOR ON THE WORK THAT WILL AFFECT EACH UTILITY SO THEY CAN BE PRESENT AT MEETINGS WHERE THEIR UTILITIES ARE AFFECTED. THE GOVERNING AGENCY SHALL BE NOTIFIED THAT THE UTILITY OWNERS/OPERATORS HAVE BEEN CONTACTED AND SHALL BE PRESENTED FOR ALL SITE MEETINGS.

6. SUBMIT TO THE GOVERNING AGENCY COMPLETE PHASING PLANS FOR REVIEW AND APPROVAL.

SITE PREPARATION AND DEMOLITION

1. CONTRACTOR SHALL DISPOSE OF ALL DEMOLISHED MATERIAL AND DEBRIS IN ACCORDANCE WITH ALL LOCAL, STATE AND FEDERAL REQUIREMENTS HAVING JURISDICTION.

2. CONTRACTOR SHALL RESTORE TO THEIR ORIGINAL CONDITION ANY AREAS ADJACENT TO AND OUTSIDE THE LIMIT OF WORK WHICH ARE DISTURBED DURING CONSTRUCTION, AT THE CONTRACTOR'S OWN EXPENSE.

3. CONTRACTOR MAY USE THE TEMPORARY STAGING AREAS AS SHOWN ON SHEETS G-05 TO G-08 FOR STOCKPILING.

4. CONTRACTOR SHALL STOCKPILE ALL STRIPPED TOPSOIL ONSITE AND ADHERE TO SWPPP REQUIREMENTS.

5. CONTRACTOR SHALL ADHERE TO COMPLIANCE TO SWPPP REQUIREMENTS AND PROVIDE ADEQUATE DRAINAGE AT ALL TIMES WITHIN THE LIMIT OF WORK. THERE SHALL BE NO PONDING OF WATER OR EROSION OF LANDSCAPED AREAS AT ANY TIME.

6. EXISTING UTILITIES, INDICATED TO REMAIN, SHALL BE PROTECTED IN PLACE, AND MAINTAINED IN GOOD WORKING CONDITION.

LAYOUT

1. THE CONTRACTOR SHALL MAINTAIN ALL HORIZONTAL AND VERTICAL CONTROL THROUGHOUT CONSTRUCTION. ALL INITIAL CONTROL, AS WELL AS ANY ADDITIONAL CONTROL OR RE-ESTABLISHING OF DISTURBED CONTROL, SHALL BE PROVIDED TO THE GOVERNING AGENCY IN ELECTRONIC AUTOCAD FORMAT WITHIN 24 HOURS OF THE COMPLETION OF THE WORK AS ACCEPTED BY THE GOVERNING AGENCY. SEE SPECIFICATIONS FOR DETAILED REQUIREMENTS RELATED TO ESTABLISHING AND MAINTAINING SURVEY AND LAYOUT CONTROL ON THE SITE.

2. LABELED DIMENSIONS SUPERSEDE SCALED DIMENSIONS FOR ALL LAYOUT WORK.

3. ALL HORIZONTAL DRAWING DIMENSIONS SHALL BE MEASURED IN A TRUE HORIZONTAL PLANE, EXCEPT AS OTHERWISE NOTED.

GRADING

1. THE CONTRACTOR SHALL PROVIDE UNIFORM SLOPE BETWEEN SPOT GRADES AND CONTOURS.

2. THE CONTRACTOR SHALL ADJUST ALL EXISTING UTILITY CASTINGS TO LINE AND GRADE, UNLESS OTHERWISED NOTED AT NO ADDITIONAL COST TO THE GOVERNMENT.

3. BETWEEN APPROXIMATE STATIONS 156+00 TO 165+00 OF THE CHANNEL IMPROVEMENTS THERE IS AN AREA OF POTENTIAL GROUNDWATER PLUME CONTAMINATION. IF CONTAMINATED GROUNDWATER IS ENCOUNTERED, CONTRACTOR TO EXERCISE THE GROUNDWATER MANAGEMENT PLAN. A COPY OF THIS PLAN IS INCLUDED IN THE CONSTRUCTION SPECIFICATIONS.

4. BETWEEN APPROXIMATE STATIONS 152+50 TO 155+00 ON THE EAST SIDE CHANNEL IMPROVEMENTS, THE CONTRACTOR IS TO BE AWARE OF ARCHEOLOGICAL SITE SCL-593 DURING EXCAVATION. IF ARCHEOLOGICAL ITEMS ARE FOUND PLEASE REFER TO THE CONSTRUCTION SPECIFICATION NO. 01 57 20 FOR GUIDANCE.

CITY OF MILPITAS NOTES

1. UNLESS BEING MODIFIED AS SHOWN ON PLANS APPROVED BY THE CITY, ALL CITY FACILITIES AND UTILITIES WITHIN THE WORK AREA SHALL BE PROTECTED IN PLACE. THE CONTRACTOR SHALL BE RESPONSIBLE FOR THE REPAIR AND REPLACEMENT OF ALL CITY FACILITIES DAMAGED DURING THE COURSE OF THIS WORK. NO OTHER WORK TO CITY FACILITIES SHALL BE COMPLETED UNLESS FIRST APPROVED BY THE CITY.

2. WHEN WORKING WITHIN THE CITY OF MILPITAS, THE CONTRACTOR SHALL ONLY HAVE PLANS ONSITE THAT ARE MARKED AS APPROVED BY THE CITY OF MILPITAS.

3. THE CONTRACTOR SHALL OBTAIN A CITY OF MILPITAS ENCROACHMENT PERMIT AND CITY BUSINESS LICENSE PRIOR TO STARTING ANY WORK WITHIN CITY RIGHT-OF-WAY.

4. ALL CITY IMPROVEMENTS AND FACILITIES THAT BECOME DAMAGED DURING CONSTRUCTION SHALL BE RESTORED BY THE CONTRACTOR TO THE SATISFACTION OF THE CITY OF MILPITAS CITY ENGINEER.

5. NO POTABLE WATER SHALL BE USED FOR CONSTRUCTION WITHIN THE CITY OF MILPITAS. ONLY NON-POTABLE (RECYCLED) WATER SHALL BE USED. THE CONTRACTOR SHALL OBTAIN A CITY OF MILPITAS RECYCLED CONSTRUCTION WATER METER. THE CONTRACTOR SHALL PAY THE REQUIRED METER DEPOSIT AND WATER USE CHARGES. RECYCLED WATER FILL STATIONS ARE LOCATED IN SEVERAL AREAS OF THE CITY.

6. THE CONTRACTOR SHALL CONTACT CITY OF MILPITAS CONSTRUCTION INSPECTION (408-586-2884) A MINIMUM OF 48 HOURS PRIOR TO STARTING WORK WITHIN THE CITY'S RIGHT-OF-WAY.

7. PER CITY OF MILPITAS ORDINANCE, CONSTRUCTION OPERATIONS, INCLUDING DELIVERIES SHALL NOT COMMENCE BEFORE 7AM OR AFTER 7PM DAILY. NO WORK SHALL OCCUR ON HOLIDAYS.

8. THE CONTRACTOR SHALL NOT OPERATE CITY OF MILPITAS WATER VALVES WITHOUT WRITTEN AUTHORIZATION FROM THE CITY'S PUBLIC WORKS UTILITY MAINTENANCE MANAGER (408) 586-2643.

9. IF ARCHAEOLOGICAL MATERIALS ARE UNCOVERED DURING CONSTRUCTION OPERATIONS, ALL WORK WITHIN 100 FEET OF THE FINDING SHALL BE STOPPED UNTIL A PROFESSIONAL ARCHAEOLOGIST WHO IS CERTIFIED BY THE SOCIETY OF CALIFORNIA ARCHAEOLOGIST (SCA), OR THE SOCIETY OF PROFESSIONAL ARCHAEOLOGIST (SOPA) HAS EVALUATED THE FINDING AND DIRECTED MITIGATION MEASURES HAVE BEEN COMPLETED.

REGISTERED PROFESSIONAL ENGINEER
ARIC TORREYSON
NO. 66068
EXP. 6-30-18
CIVIL
STATE OF CALIFORNIA

US Army Corps of Engineers
San Francisco District
1455 Market Street
San Francisco, CA 94103

TETRA TECH
17885 VON KARMAN AVE.,
SUITE 500
IRVINE, CA 92614
Phone: (949) 809-5000

Mark	Description	Date	Appr.

DESIGNED BY: AMT | CHECKED BY: YHC | DRAWN BY: AWG
DATE: 8-4-2016 | SHEET NO. 3 of 71 | DRAWING NO.

SUBMITTED:
Chief, Civil Design Section
APPROVAL RECOMMENDED:
Chief, Engineering Branch
APPROVED:
Chief, Engineering & Technical Services

PREPARED UNDER THE DIRECTION OF
JOHN C. MORROW
LT. COLONEL, C.E., DISTRICT COMMANDER

SANTA CLARA COUNTY, CALIFORNIA
UPPER BERRYESSA CREEK FLOOD RISK MANAGEMENT PROJECT

GENERAL NOTES

Sheet reference number
G-03

CONFORMED DRAWING

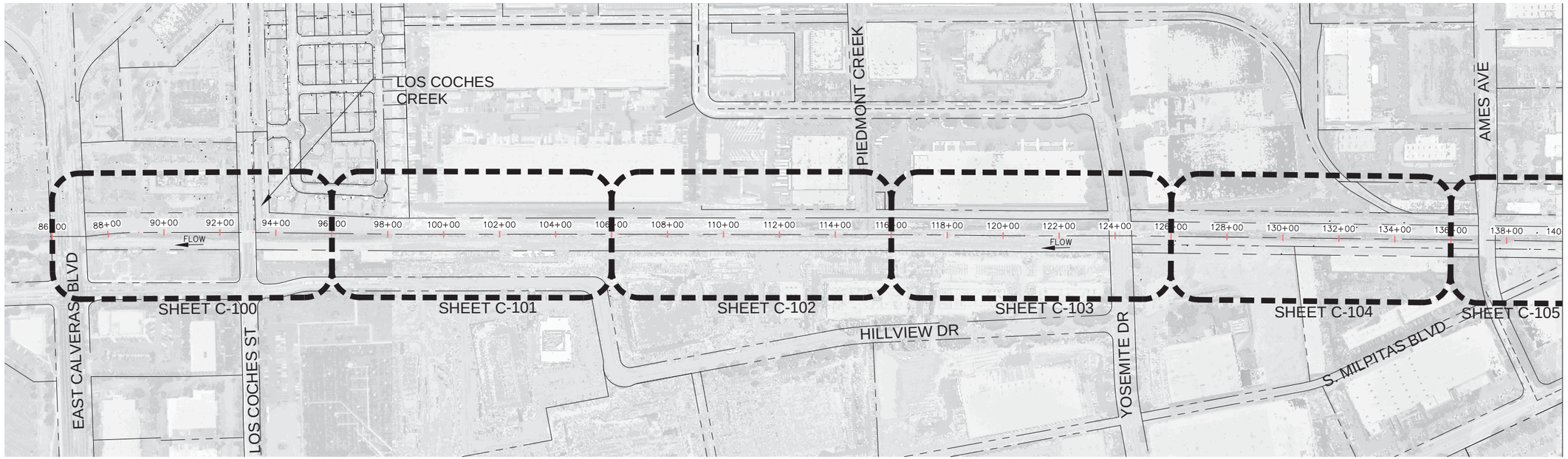

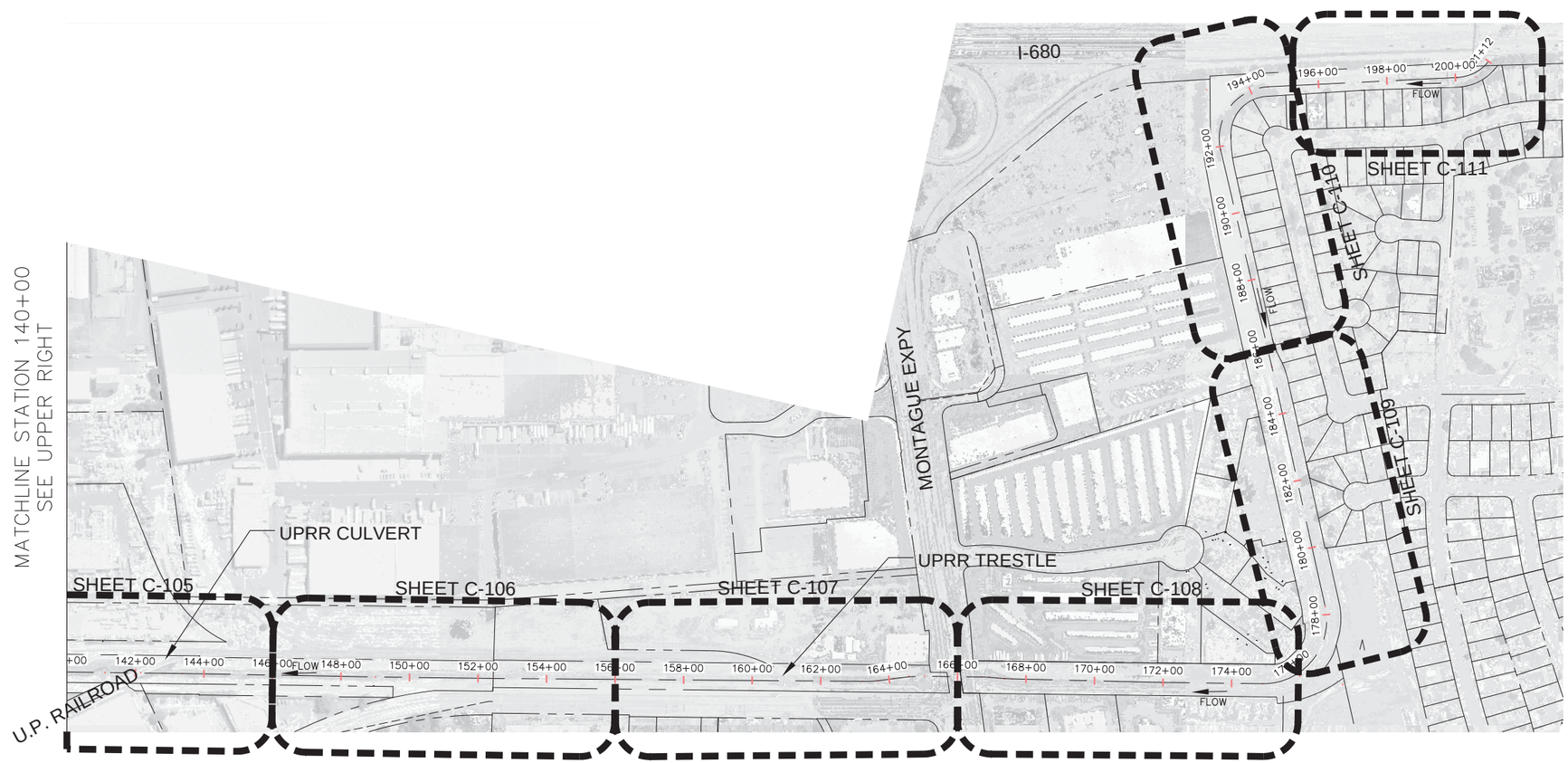

200 0 100 200 400

REGISTERED PROFESSIONAL ENGINEER
ARIC TORREYSON
NO. 66068
EXP. 6-30-18
CIVIL
STATE OF CALIFORNIA

US Army Corps of Engineers
San Francisco District
1455 Market Street
San Francisco, CA 94103

TETRA TECH
17885 VON KARMAN AVE.,
SUITE 500
IRVINE, CA 92614
Phone: (949) 809-5000

Mark	Description	Date	Appr.

DESIGNED BY: AMT
DRAWN BY: AWG
CHECKED BY: YHC
DATE: 8-4-2016
SHEET NO. 4 of 71
DRAWING NO.

PREPARED UNDER THE DIRECTION OF
JOHN C. MORROW
LT. COLONEL, C.E., DISTRICT COMMANDER

SUBMITTED:
Chief, Civil Design Section
APPROVAL RECOMMENDED:
Chief, Engineering Branch
APPROVED:
Chief, Engineering & Technical Services

SANTA CLARA COUNTY, CALIFORNIA
UPPER BERRYESSA CREEK FLOOD RISK MANAGEMENT PROJECT

SHEET LAYOUT

Sheet reference number
G-04

P:\Wat\T31331 Berryessa Design SCVWD\11 Design\01 Final Design\Sheets\ G-04-SHEET LAYOUT.dwg 02 Aug 2016 - 6:13pm

CONFORMED DRAWING

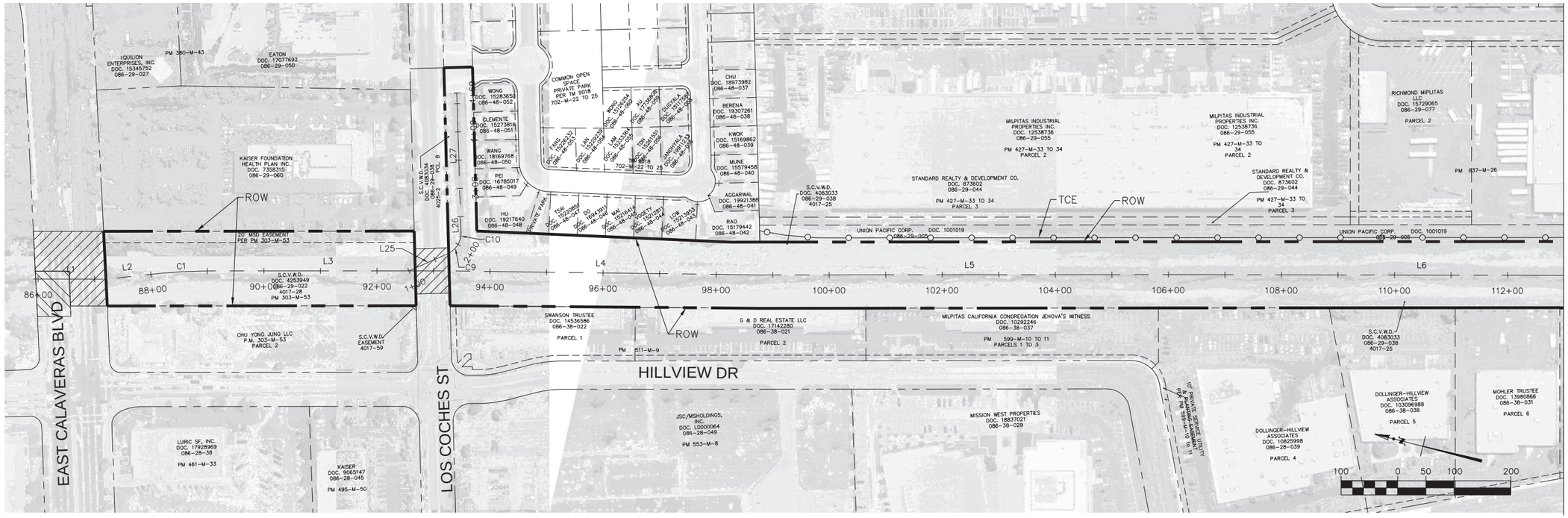

MATCHLINE STATION 113+00
SEE SHEET G-06

BERRYESSA CREEK IMPROVEMENTS – LINE TABLE

LINE NO.	BEG. STATION	BEG. NORTHING	BEG. EASTING	END STATION	END NORTHING	END EASTING	LENGTH	BEARING
L1	85+92.89	1983467.93	6157292.57	87+21.43	1983342.43	6157320.40	128.54'	S12° 30' 07"E
L2	87+21.43	1983342.43	6157320.40	87+98.59	1983269.42	6157345.33	77.16'	S18° 51' 18"E
L3	89+08.68	1983163.49	6157375.11	93+18.66	1982763.30	6157464.17	409.98'	S12° 32' 49"E
L4	93+18.66	1982763.30	6157464.17	98+73.42	1982220.27	6157577.65	554.76'	S11° 48' 10"E
L5	98+73.42	1982220.27	6157577.65	106+23.42	1981488.28	6157741.02	750.00'	S12° 34' 53"E
L6	106+23.42	1981488.28	6157741.02	114+73.14	1980658.45	6157923.80	849.72'	S12° 25' 19"E
L25	1+00.00	1982823.94	6157450.68	1+74.85	1982763.74	6157495.16	74.85'	S36° 27' 46"E
L26	2+22.19	1982748.75	6157537.20	2+48.06	1982755.13	6157562.27	25.87'	N75° 43' 00"E
L27	2+48.06	1982755.13	6157562.27	4+68.77	1982809.58	6157776.15	220.70'	N75° 43' 00"E

BERRYESSA CREEK IMPROVEMENTS – CURVE TABLE

CURVE NO.	BEG. STATION	BEG. NORTHING	BEG. EASTING	END. STATION	END. NORTHING	END. EASTING	LENGTH	RADIUS	DELTA	TANGENT LENGTH
C9	1+74.85	1982763.74	6157495.16	2+09.28	1982747.62	6157524.39	34.428'	40.00	49°18'56"	18.36'
C10	2+09.28	1982747.62	6157524.39	2+22.19	1982748.75	6157537.20	12.919'	40.00	18°30'20"	6.52'

NOTES

1. THE BASIS OF BEARING AND COORDINATES FOR THIS SURVEY ARE BASED UPON THE NORTH AMERICAN DATUM OF 1983 (NAD83), CALIFORNIA COORDINATE SYSTEM, ZONE III, EPOCH 1998.50; THE CONTROL POINTS USED ARE SHOWN ON THE RECORD OF SURVEY RECORDED ON NOVEMBER 14TH, 2007 IN BOOK 32 OF MAPS AT PAGES 47–97, ALAMEDA COUNTY RECORDS. THE IDENTICAL MAP IS ALSO RECORDED AT THE SANTA CLARA COUNTY RECORDERS OFFICE IN BOOK 821 OF MAPS AT PAGES 1–51.
2. THE BENCHMARK USED FOR THIS SURVEY WAS VTA 172, AN ALUMINUM DISK AT THE SOUTHEAST CORNER OF UPRR CROSSING AND MONTAGUE EXPRESSWAY, APPROXIMATELY 12' SOUTH OF CURB, AND APPROXIMATELY 30' EAST OF R/R. ELEVATION IS 50.44 FEET, BASED ON SVBX BENCHMARK MONITORING RESULTS–EPOCH 2011.5.
3. THE CONTRACTOR SHALL LIMIT WORK AREA TO WITHIN PROJECT RIGHT OF WAY, STAGING AREAS, AND TCE AS IDENTIFIED ON THE PLANS.

SCVWD EASEMENT

UPRR FEE WITH SCVWD EASEMENT

TEMPORARY CONSTRUCTION EASEMENT (TCE)/ LIMITS OF CONSTRUCTION

BENCHMARK POINT TABLE

POINT	NORTHING	EASTING	ELEV	DESCRIPTION
BM045	1983338	6157298	31.27	BRASS DISK ON TOP OF CONCRETE HEADWALL: SOUTHWEST CORNER OF CALAVERAS BOULEVARD BRIDGE OVER BERRYESSA CREEK; 200 FEET EAST FROM S. HILLVIEW DRIVE, CITY OF MILPITAS.
BM061	19983721	6151312	18.64	BRASS DISK ON CONCRETE BASE OF SIDEWALK'S GUARDRAIL; AT THE SOUTHWEST CORNER OF MARYLINN DRIVE BRIDGE OVER PENITENCIA CREEK, CITY OF MILPITAS.
BM062	1988375	6150755	25.49	BRASS DISK AT THE SOUWESTERLY CORNER OF BRIDGE FOR CALIFORNIA CIRCLE – MILMONT DRIVE OVER PENITENCIA CREEK AT 350 FEET EASTERLY FROM FAIRVIEW WAY, CITY OF SAN JOSE.
BM276	1988019	6152672	21.47	BRASS DISK ON TOP AND BACK OF SIDEWALK; 50 FEET NORTHWEST OF INTERSECTION FOR N. MILPITAS BOULEVARD AND HANSON COURT; 1 FOOT EAST OF FACE OF CONCRETE HEADWALL; CENTER OF CALERA CREEK, CITY OF MILPITAS.
BM277	1990417	6152209	25.39	BRASS DISK IN CENTER OF EAST SIDE OF CONCRETE SLAB FOR TELEPHONE ACCESS BOX; 2 FEET EAST FROM 6 FOOT TALL TELEPHONE CONTROL BOX; LOCATED ON WEST SIDE OF N. MILPITAS BOULEVARD; BETWEEN WASHINGTON STREET AND HOMME WAY, CITY OF SAN JOSE.
BM318	1991161	6154574	64.66	BRASS DISK ON TOP OF HETCH HETCHY PIPELINE WATER VAULT; 40 FEET NORTH OF CENTERLINE OF WASHINGTON AVENUE; 130 FEET WEST FROM CENTERLINE FOR ROGER STREET (NEAR MILPITAS HIGH SCHOOL); EAST SIDE OF STRUCTURE AND APPROXIMATELY IN THE MIDDLE OF ITS LENGTH; 2 FEET HIGHER THAN GROUND, CITY OF SAN JOSE.
BM102	1984339	6153198	16.04	USCGS BRASS DISK (MB74), ON TOP OF HEADWALL AT NORTHWEST CORNER BRIDGE FOR RAILROAD COURT OVER WRIGLEY FORD CREEK; 250 FEET NORTH FROM INTERSECTION OF RAILROAD COURT AND N. MAIN STREET; 400 FEET NORTH OF THE INTERSECTION OF THE SOUTHERN PACIFIC RAILROAD CROSSING AND MAIN STREET (THE OLD OAKLANDOSAN JOSE ROAD), CITY OF MILPITAS.
BM1188	1984804	6154915	27.05	BRASS DISK ON TOP OF CONCRETE SIDEWALK AT THE SOUTHEAST CORNER OF INTERSECTION FOR BERRYESSA CREEK AT NORTH MILPITAS BOULEVARD. DISK IS LOCATED AT CENTER OF SIDEWALK, CITY OF MILPITAS.

REGISTERED PROFESSIONAL ENGINEER ARIC TORRESON NO. 66068 EXP. 6-30-18 CIVIL STATE OF CALIFORNIA

US Army Corps of Engineers
San Francisco District
1455 Market Street
San Francisco, CA 94103

TETRA TECH
17885 VON KARMAN AVE., SUITE 500
IRVINE, CA 92614
Phone: (949) 809-5000

Mark	Description	Date	Appr.

DESIGNED BY: AMT
DATE: 8-4-2016
CHECKED BY: YHC
SHEET NO. 5 of 71
DRAWN BY: AWG
DRAWING NO.

SUBMITTED:
Chief, Civil Design Section
APPROVAL RECOMMENDED:
Chief, Engineering Branch
APPROVED:
Chief, Engineering & Technical Services

PREPARED UNDER THE DIRECTION OF
JOHN C. MORROW
LT. COLONEL, C.E., DISTRICT COMMANDER

SANTA CLARA COUNTY, CALIFORNIA
UPPER BERRYESSA CREEK FLOOD RISK MANAGEMENT PROJECT
HORIZONTAL CHANNEL CONTROL & ROW
STA. 87+21.43 TO STA. 113+00.00

Sheet reference number
G-05

CONFORMED DRAWING

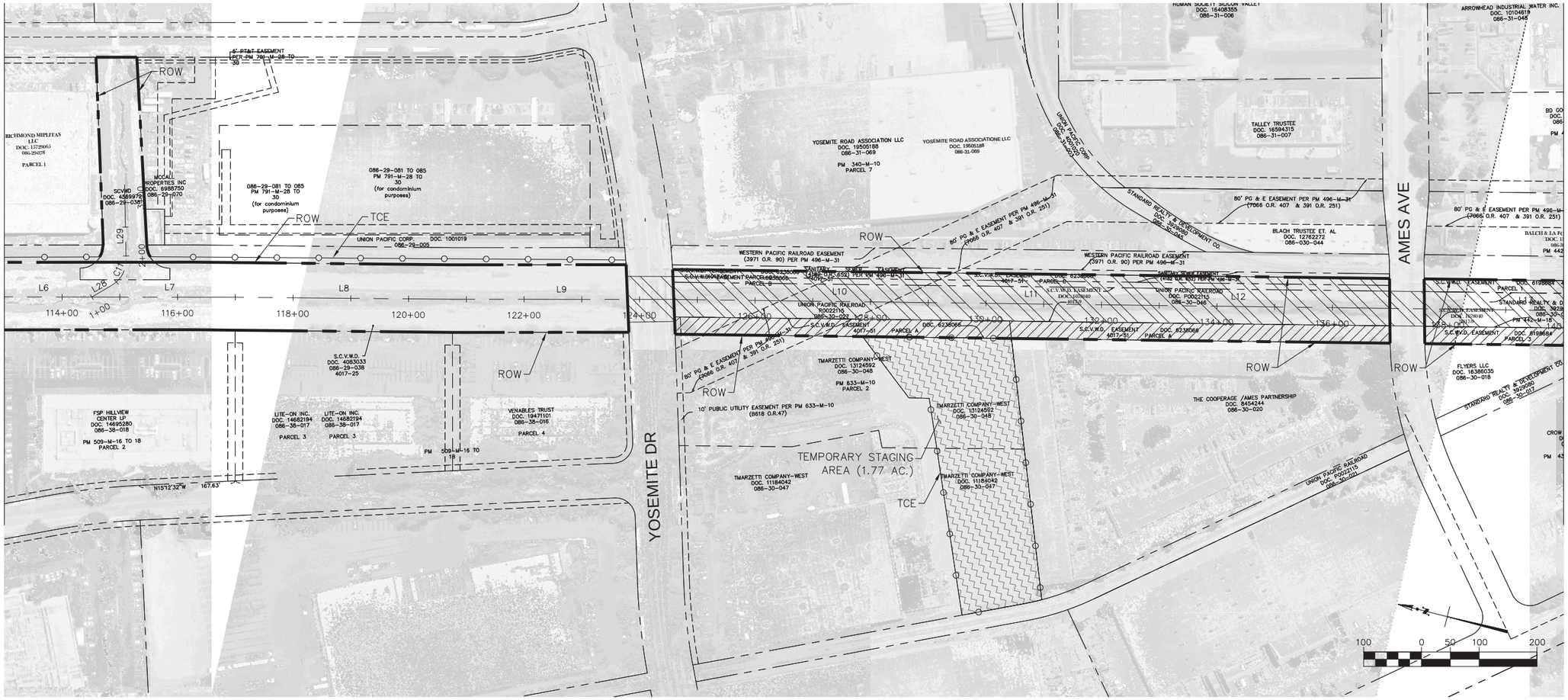

BERRYESSA CREEK IMPROVEMENTS – LINE TABLE								
LINE NO.	BEG. STATION	BEG. NORTHING	BEG. EASTING	END STATION	END NORTHING	END EASTING	LENGTH	BEARING
L6	106+23.42	1981488.28	6157741.02	114+73.14	1980658.45	6157923.80	849.72'	S12° 25' 19"E
L7	114+73.14	1980658.45	6157923.80	116+99.78	1980437.15	6157972.72	226.65'	S12° 27' 59"E
L8	116+99.78	1980437.15	6157972.72	120+76.67	1980068.51	6158051.13	376.88'	S12° 00' 29"E
L9	120+76.67	1980068.51	6158051.13	124+53.36	1979700.76	6158132.69	376.69'	S12° 30' 17"E
L10	124+53.36	1979700.76	6158132.69	130+39.61	1979126.94	6158252.79	586.25'	S11° 49' 15"E
L11	130+39.61	1979126.94	6158252.79	131+14.86	1979053.29	6158268.20	75.25'	S11° 49' 15"E
L12	131+14.86	1979053.29	6158268.20	137+59.33	1978422.49	6158400.22	644.47'	S11° 49' 15"E
L13	137+59.33	1978422.49	6158400.22	141+11.28	1978077.99	6158472.32	351.96'	S11° 49' 15"E
L28	1+00.00	1980679.77	6157919.13	1+40.39	1980650.20	6157946.64	40.39'	S42° 56' 01"E
L29	1+93.41	1980635.68	6157995.08	3+23.39	1980666.44	6158121.37	129.98'	N76° 18' 30"E

SCVWD EASEMENT

UPRR FEE WITH SCVWD EASEMENT

TEMPORARY CONSTRUCTION EASEMENT (TCE)/ LIMITS OF CONSTRUCTION

BERRYESSA CREEK IMPROVEMENTS – CURVE TABLE										
CURVE NO.	BEG. STATION	BEG. NORTHING	BEG. EASTING	END. STATION	END. NORTHING	END. EASTING	LENGTH	RADIUS	DELTA	TANGENT LENGTH
C11	1+40.39	1980650.20	6157946.64	1+93.41	1980635.68	6157995.08	53.021'	50.00	60°45'29"	29.31'

REGISTERED PROFESSIONAL ENGINEER
ARIC TORREYSON
NO. 66068
EXP. 6-30-18
CIVIL
STATE OF CALIFORNIA

US Army Corps of Engineers
San Francisco District
1455 Market Street
San Francisco, CA 94103

TETRA TECH
17885 VON KARMAN AVE.,
SUITE 500
IRVINE, CA 92614
Phone: (949) 809-5000

Mark	Description	Date	Appr.

DESIGNED BY: AMT
CHECKED BY: YHC
DRAWN BY: AWG
DATE: 8-4-2016
SHEET NO. 6 of 71
DRAWING NO.

SUBMITTED:
Chief, Civil Design Section
APPROVAL RECOMMENDED:
Chief, Engineering Branch
APPROVED:
Chief, Engineering & Technical Services

PREPARED UNDER THE DIRECTION OF
JOHN C. MORROW
LT. COLONEL, C.E., DISTRICT COMMANDER

SANTA CLARA COUNTY, CALIFORNIA
UPPER BERRYESSA CREEK FLOOD RISK MANAGEMENT PROJECT
HORIZONTAL CHANNEL CONTROL & ROW
STA. 113+00.00 TO STA. 140+00.00

Sheet reference number
G-06

P:\Water\T31331 Berryessa Design SCVWD\11 Design\01 Final Design\Sheets\ G-06-SURVEY LAYOUT (2).dwg 02 Aug 2016 - 6:21pm

CONFORMED DRAWING

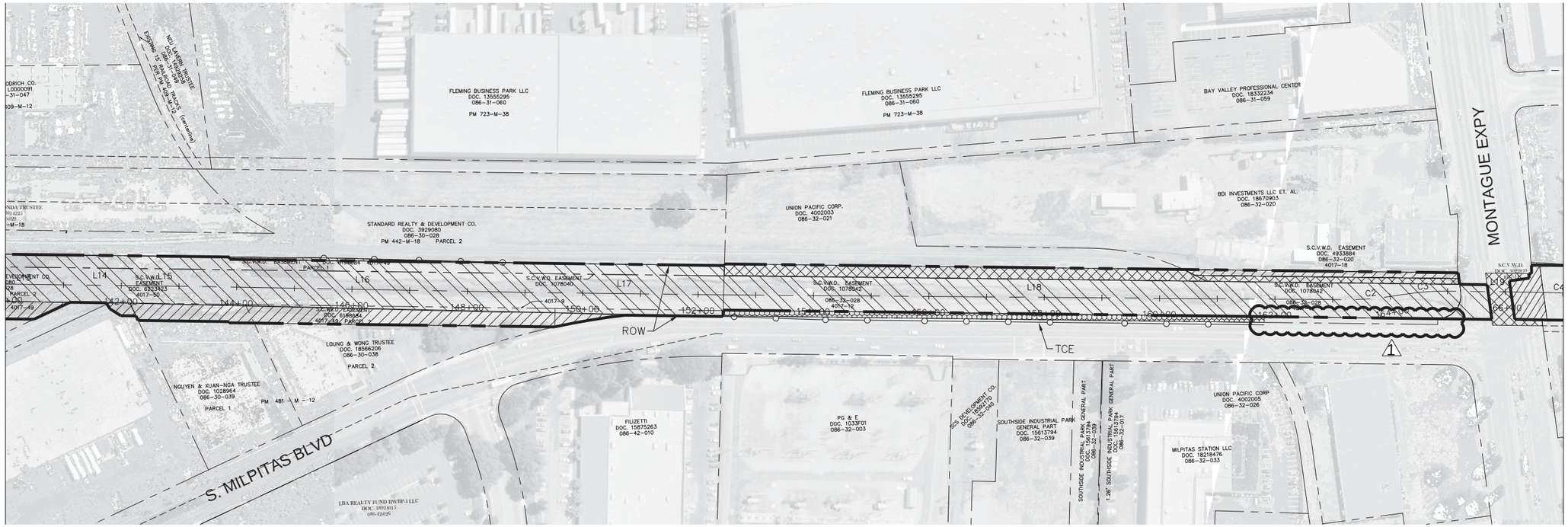

BERRYESSA CREEK IMPROVEMENTS – LINE TABLE								
LINE NO.	BEG. STATION	BEG. NORTHING	BEG. EASTING	END STATION	END NORTHING	END EASTING	LENGTH	BEARING
L13	137+59.33	1978422.49	6158400.22	141+11.28	1978077.99	6158472.32	351.96'	S11° 49' 15"E
L14	141+11.28	1978077.99	6158472.32	142+15.46	1977976.03	6158493.66	104.18'	S11° 49' 15"E
L15	142+15.46	1977976.03	6158493.66	143+36.25	1977857.80	6158518.41	120.79'	S11° 49' 15"E
L16	143+36.25	1977857.80	6158518.41	149+00.17	1977305.22	6158630.94	563.92'	S11° 30' 38"E
L17	149+00.17	1977305.22	6158630.94	152+43.92	1976968.75	6158701.31	343.75'	S11° 48' 48"E
L18	152+43.92	1976968.75	6158701.31	163+22.04	1975914.55	6158927.18	1078.13'	S12° 05' 35"E
L19	165+04.14	1975740.82	6158980.89	166+69.09	1975579.38	6159014.74	164.95'	S11° 50' 22"E

BERRYESSA CREEK IMPROVEMENTS – CURVE TABLE										
CURVE NO.	BEG. STATION	BEG. NORTHING	BEG. EASTING	END. STATION	END. NORTHING	END. EASTING	LENGTH	RADIUS	DELTA	TANGENT LENGTH
C2	163+22.04	1975914.55	6158927.18	164+11.99	1975828.77	6158953.81	89.942'	500.00	10°18'24"	45.09'
C3	164+11.99	1975828.77	6158953.81	165+04.14	1975740.82	6158980.89	92.156'	500.00	10°33'37"	46.21'

MILPITAS EASEMENT

SCVWD EASEMENT

UPRR FEE WITH SCVWD EASEMENT

UPRR EASEMENT

TEMPORARY CONSTRUCTION EASEMENT (TCE)/ LIMITS OF CONSTRUCTION

REGISTERED PROFESSIONAL ENGINEER
ARIC TORREYSON
NO. 66068
EXP. 6-30-18
CIVIL
STATE OF CALIFORNIA

US Army Corps of Engineers
San Francisco District
1455 Market Street
San Francisco, CA 94103

TETRA TECH
17885 VON KARMAN AVE.,
SUITE 500
IRVINE, CA 92614
Phone: (949) 809-5000

Mark	Description	Date	Appr.
1	LEFT BANK TCE DELETED	7/6/16	

DESIGNED BY: AMT
CHECKED BY: YHC
DRAWN BY: AWG
DATE: 8-4-2016
SHEET NO. 7 of 71
DRAWING NO.

SUBMITTED:
Chief, Civil Design Section
APPROVAL RECOMMENDED:
Chief, Engineering Branch
APPROVED:
Chief, Engineering & Technical Services

PREPARED UNDER THE DIRECTION OF
JOHN C. MORROW
LT. COLONEL, C.E., DISTRICT COMMANDER

SANTA CLARA COUNTY, CALIFORNIA
UPPER BERRYESSA CREEK FLOOD RISK MANAGEMENT PROJECT
HORIZONTAL CHANNEL CONTROL & ROW
STA. 140+00.00 TO STA. 167+00.00

Sheet reference number
G-07

P:\Watr\T31331 Berryessa Design SCVWD\11 Design\01 Final Design\Sheets\ G-07-SURVEY LAYOUT (3).dwg 02 Aug 2016 - 6:24pm

CONFORMED DRAWING

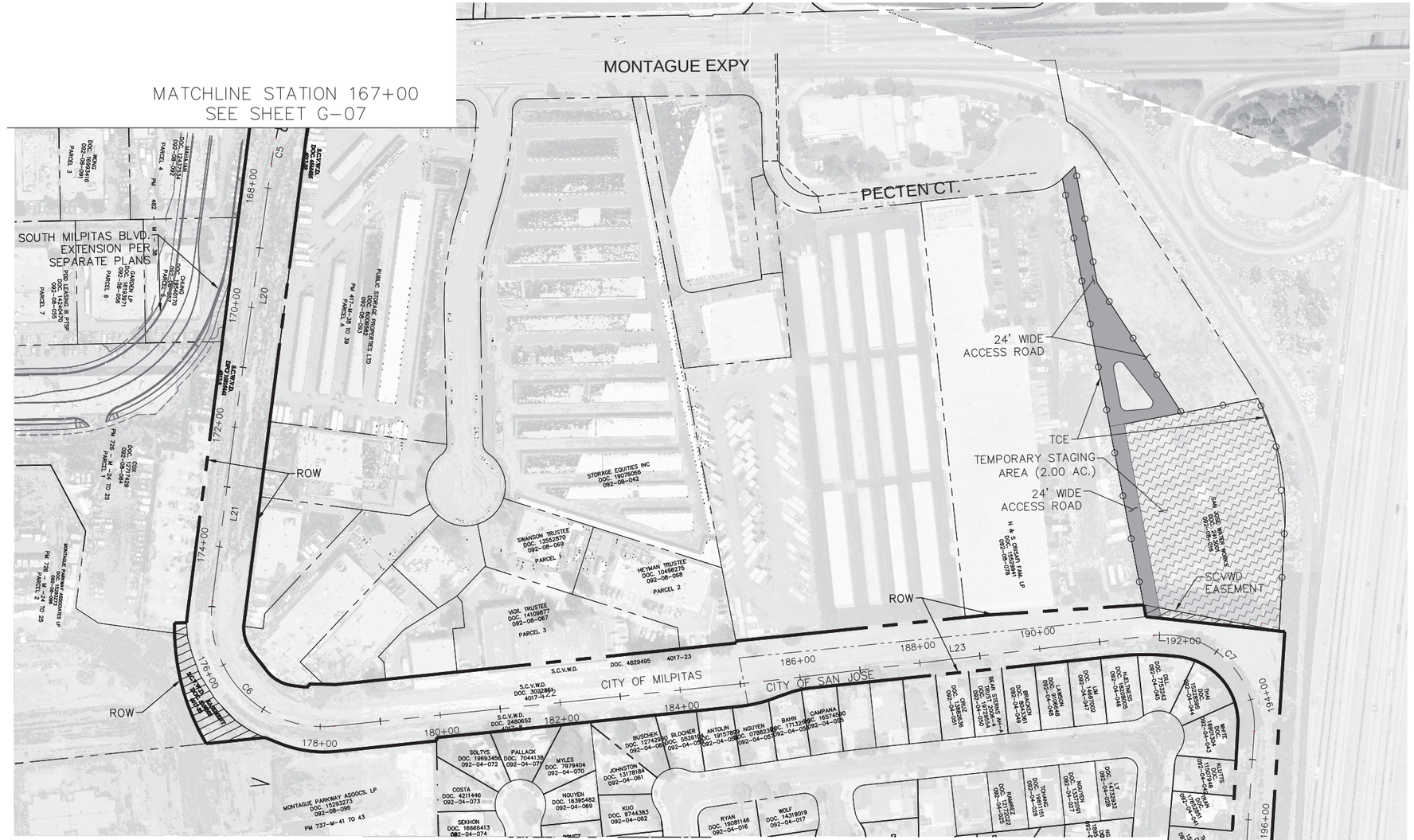

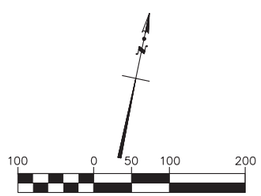

BERRYESSA CREEK IMPROVEMENTS – LINE TABLE								
LINE NO.	BEG. STATION	BEG. NORTHING	BEG. EASTING	END STATION	END NORTHING	END EASTING	LENGTH	BEARING
L20	167+59.00	1975490.60	6159028.72	171+95.84	1975062.06	6159113.49	436.84'	S11° 11' 23"E
L21	171+95.84	1975062.06	6159113.49	174+90.40	1974773.73	6159173.75	294.56'	S11° 48' 20"E
L22	178+23.84	1974644.01	6159433.24	185+39.80	1974947.44	6160081.73	715.96'	N64° 55' 30"E
L23	185+39.80	1974947.44	6160081.73	191+90.06	1975231.07	6160666.87	650.26'	N64° 08' 23"E
L24	194+52.85	1975135.71	6160876.66	200+04.27	1974604.01	6161022.79	551.42'	S15° 22' 03"E

BERRYESSA CREEK IMPROVEMENTS – CURVE TABLE										
CURVE NO.	BEG. STATION	BEG. NORTHING	BEG. EASTING	END. STATION	END. NORTHING	END. EASTING	LENGTH	RADIUS	DELTA	TANGENT LENGTH
C4	166+69.09	1975579.38	6159014.74	167+16.88	1975532.21	6159022.29	47.790'	500.00	5°28'35"	23.91'
C5	167+16.88	1975532.21	6159022.29	167+59.00	1975490.60	6159028.72	42.121'	500.00	4°49'36"	21.07'
C6	174+90.40	1974773.73	6159173.75	178+23.84	1974644.01	6159433.24	333.443'	185.00	103°16'11"	233.70'
C7	191+90.06	1975231.07	6160666.87	194+52.85	1975135.71	6160876.66	262.791'	150.00	100°22'44"	179.97'
C8	200+04.27	1974604.01	6161022.79	201+11.56	1974523.92	6161088.89	107.288'	121.53	50°35'00"	57.42'

SCVWD EASEMENT

TEMPORARY CONSTRUCTION EASEMENT (TCE)/ LIMITS OF CONSTRUCTION

REGISTERED PROFESSIONAL ENGINEER
ARIC TORREYSON
NO. 66068
EXP. 6-30-18
CIVIL
STATE OF CALIFORNIA

US Army Corps of Engineers
San Francisco District
1455 Market Street
San Francisco, CA 94103

TETRA TECH
17885 VON KARMAN AVE.,
SUITE 500
IRVINE, CA 92614
Phone: (949) 809-5000

Mark	Description	Date	Appr.

DESIGNED BY: AMT
CHECKED BY: YHC
DRAWN BY: AWG
DATE: 8-4-2016
SHEET NO. 8 of 71
DRAWING NO.

PREPARED UNDER THE DIRECTION OF
JOHN C. MORROW
LT. COLONEL, C.E., DISTRICT COMMANDER

SUBMITTED:
Chief, Civil Design Section
APPROVAL RECOMMENDED:
Chief, Engineering Branch
APPROVED:
Chief, Engineering & Technical Services

SANTA CLARA COUNTY, CALIFORNIA
UPPER BERRYESSA CREEK FLOOD RISK MANAGEMENT PROJECT

HORIZONTAL CHANNEL CONTROL & ROW
STA. 167+00.00 TO STA. 201+34.17

Sheet reference number
G-08

P:\Watt\T31331 Berryessa Design SCVWD\L1 Design\01 Final Design\Sheets\ G-08-SURVEY LAYOUT (4).dwg 03 Aug 2016 - 9:38am

CONFORMED DRAWING

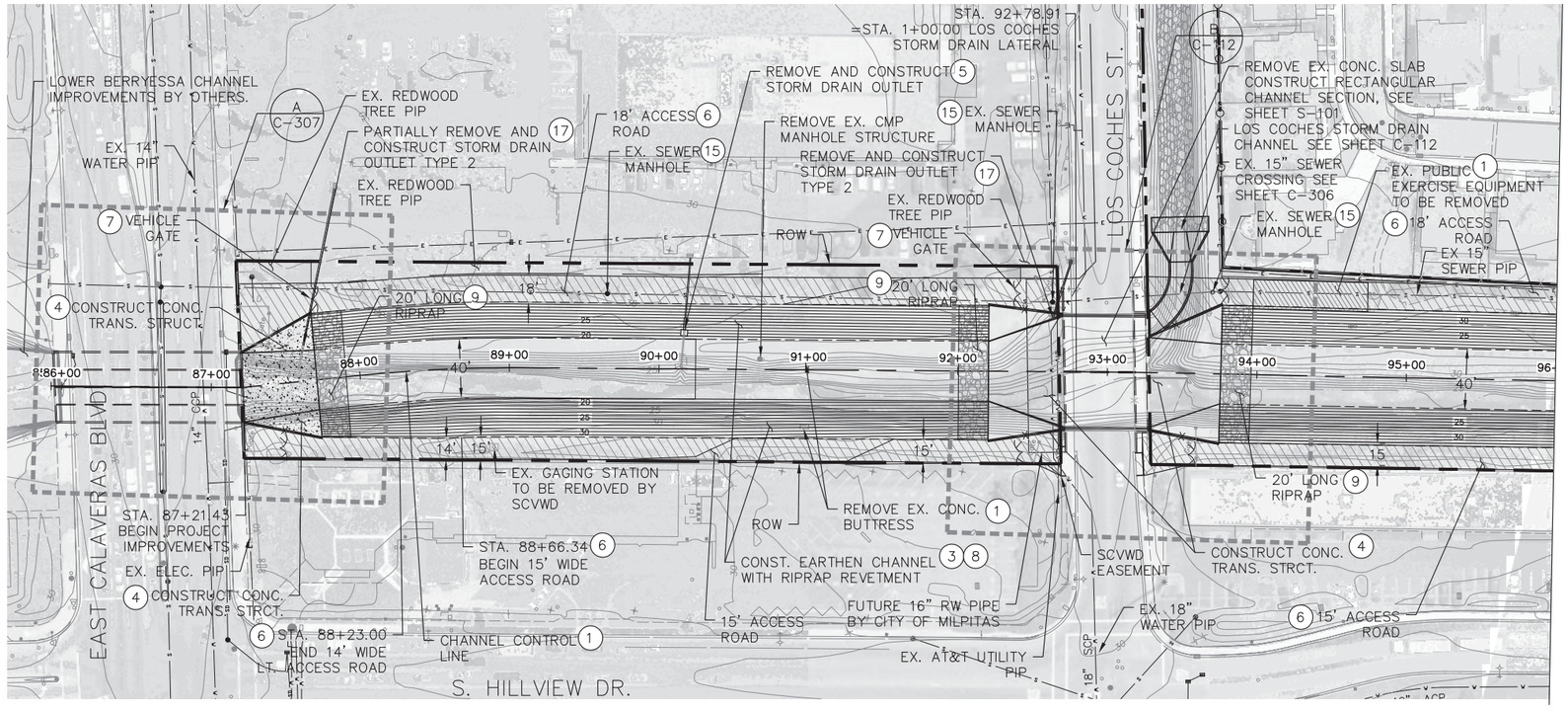

CONSTRUCTION NOTES

1. REMOVE EXISTING FEATURES TO CONSTRUCT IMPROVEMENTS AS SHOWN
3. CONSTRUCT EARTHEN CHANNEL WITH RIPRAP REVETMENT PER TYPICAL DETAILS AND CROSS SECTIONS AS SHOWN ON SHEETS C-200 AND C-201
4. CONSTRUCT CONCRETE TRANSITION STRUCTURE PER DETAILS AS SHOWN ON SHEETS S-103
5. REMOVE EXISTING AND CONSTRUCT NEW STORM DRAIN OUTLET AS SHOWN ON SHEET C-301
6. CONSTRUCT 6" AB ACCESS ROAD AS SHOWN ON THE PROFILE AND CROSS SECTIONS
7. REMOVE EXISTING AND CONSTRUCT NEW DOUBLE SWING GATE PER DETAIL ON SHEET C-303
8. CONSTRUCT RIPRAP REVETMENT PER DETAIL ON SHEET C-302
9. CONSTRUCT 24" THICK RIPRAP REVETMENT PER DETAIL ON SHEET C-302
15. ADJUST EX. SEWER MANHOLE TO FINISH GRADE AS NECESSARY PER DETAIL ON SHEET C-304
17. REMOVE EXISTING AND CONSTRUCT NEW STORM DRAIN OUTLET TYPE 2 AS SHOWN ON SHEET C-301

EX. GAGING STATION ALONG LEFT BANK TO BE REMOVED BY SCVWD. PLEASE PROVIDE 48-HOUR NOTICE TO SCVWD TO REMOVE EQUIPMENT, ANTENNA, AND ELECTRICAL BOX. CONTRACTOR TO INSTALL 1 1/2" GALVANIZED PIPE THREADED ON BOTH ENDS UNDERNEATH THE LEFT BANK AND RIGHT BANK ACCESS ROADS. THE THREADED PIPE SHOULD BE EXPOSED SO ADDITIONAL PIPE FITTINGS CAN BE AFFIXED TO THE EXPOSED THREADS. PLEASE COORDINATE WITH SCVWD, KEN STUMPF AT (408) 630-2912

IN-CHANNEL CONSTRUCTION WORK IS NOT ALLOWED FROM CONTRACT AWARD AND NTP UNTIL MARCH 1, 2017 OR THE END OF THE RAINY SEASON AS DETERMINED/DIRECTED BY THE CONTRACTING OFFICER FROM STATION 87+21.43 TO STATION 120+00 AND FROM STATION 159+50 TO STATION 179+00. THIS IS TO LIMIT THE POTENTIAL FOR DOWNSTREAM FLOODING. WORK IN ALL OTHER AREAS IS ALLOWED ANYTIME IT IS NOT PRECLUDED BY ANY AND ALL OTHER REQUIREMENTS.

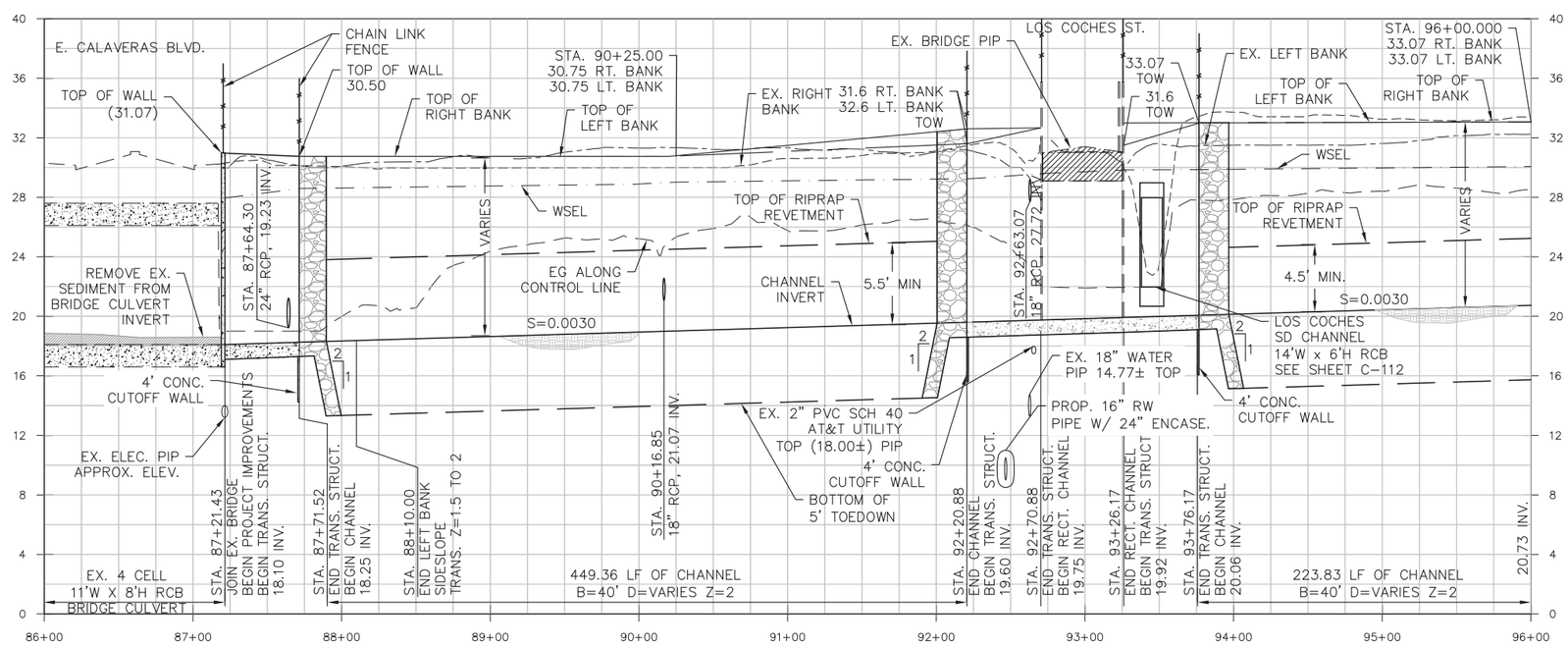

PROFILE NOTE: EXISTING UTILITIES ON ROADWAY CROSSINGS ARE TO BE PROTECTED IN PLACE AND NOT SHOWN ON PROFILE VIEW. PLEASE SEE APPROXIMATE LOCATION OF EXISTING UTILITIES ON PLAN VIEW.

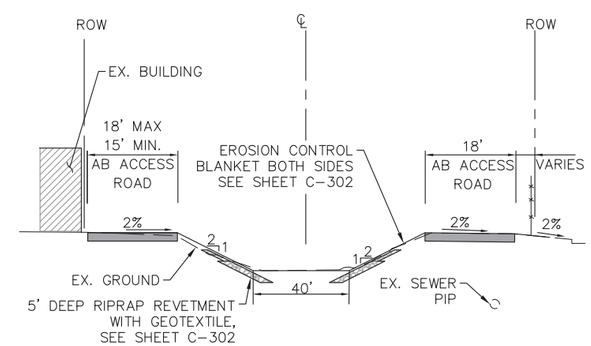

TYPICAL SECTION

N.T.S.

SCALE: 1"=50' (HORZ.) 1"=5' (VERT.)

REGISTERED PROFESSIONAL ENGINEER ARIC TORREYSON NO. 66068 EXP. 6-30-18 CIVIL STATE OF CALIFORNIA

US Army Corps of Engineers
San Francisco District
1455 Market Street
San Francisco, CA 94103

TETRA TECH
17885 VON KARMAN AVE., SUITE 500
IRVINE, CA 92614
Phone: (949) 809-5000

Mark	Description	Date	Appr.
1	CONSTRUCTION NOTE 19 REMOVED	7/6/16	

DESIGNED BY: AMT
CHECKED BY: YHC
DRAWN BY: AWG
DATE: 8-4-2016
SHEET NO. 9 of 71
DRAWING NO.
PREPARED UNDER THE DIRECTION OF JOHN C. MORROW LT. COLONEL, C.E., DISTRICT COMMANDER

SUBMITTED: Chief, Civil Design Section
APPROVAL RECOMMENDED:
Chief, Engineering Branch
APPROVED: Chief, Engineering & Technical Services

SANTA CLARA COUNTY, CALIFORNIA
UPPER BERRYESSA CREEK FLOOD RISK MANAGEMENT PROJECT

PLAN AND PROFILE

STA. 86+00.00 TO STA. 96+00.00

Sheet reference number C-100

P:\Wat\T31331 Berryessa Design SCVWD\11 Design\01 Final Design\Sheets\ PP - (1).dwg 02 Aug 2016 - 6:34pm

CONFORMED DRAWING

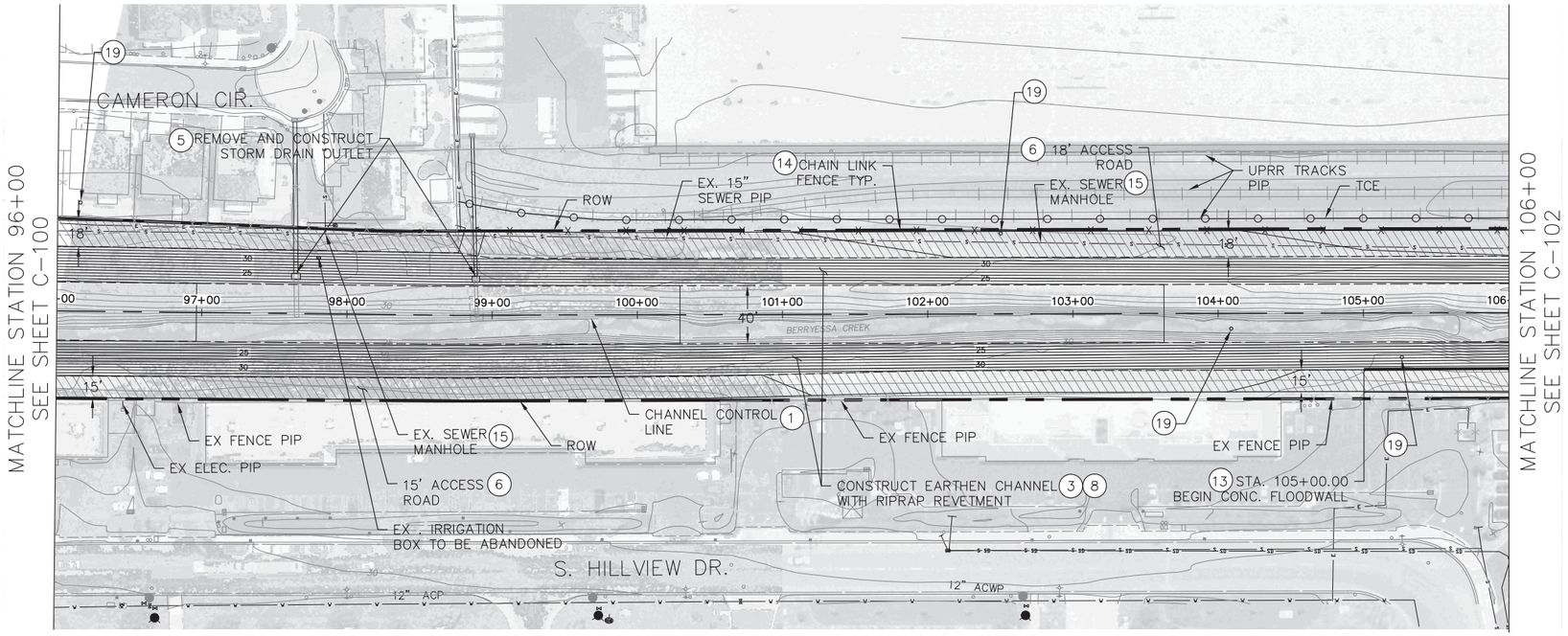

CONSTRUCTION NOTES

1. REMOVE EXISTING FEATURES TO CONSTRUCT IMPROVEMENTS AS SHOWN
3. CONSTRUCT EARTHEN CHANNEL WITH RIPRAP REVETMENT PER TYPICAL DETAILS AND CROSS SECTIONS AS SHOWN ON SHEETS C-200 AND C-201
5. REMOVE EXISTING AND CONSTRUCT NEW STORM DRAIN OUTLET AS SHOWN ON SHEET C-301
6. CONSTRUCT 6" AB ACCESS ROAD AS SHOWN ON THE PROFILE AND CROSS SECTIONS
8. CONSTRUCT RIPRAP REVETMENT PER DETAIL ON SHEET C-302
13. CONSTRUCT CONRETE FLOODWALL PER DETAILS ON SHEET S-105
14. CONSTRUCT 6' HIGH CHAIN LINK FENCE PER DETAIL ON SHEET C-303
15. ADJUST EX. SEWER MANHOLE TO FINISH GRADE AS NECESSARY PER DETAIL ON SHEET C-304
19. EX. MONITORING WELLS TO BE ABANDONED BY OTHERS FOLLOWING CONTRACTOR NOTIFICATION TO SCVWD. CONTRACTOR TO THEN REMOVE INTERFERING PORTIONS.

IN-CHANNEL CONSTRUCTION WORK IS NOT ALLOWED FROM CONTRACT AWARD AND NTP UNTIL MARCH 1, 2017 OR THE END OF THE RAINY SEASON AS DETERMINED/DIRECTED BY THE CONTRACTING OFFICER FROM STATION 87+21.43 TO STATION 120+00 AND FROM STATION 159+50 TO STATION 179+00. THIS IS TO LIMIT THE POTENTIAL FOR DOWNSTREAM FLOODING. WORK IN ALL OTHER AREAS IS ALLOWED ANYTIME IT IS NOT PRECLUDED BY ANY AND ALL OTHER REQUIREMENTS.

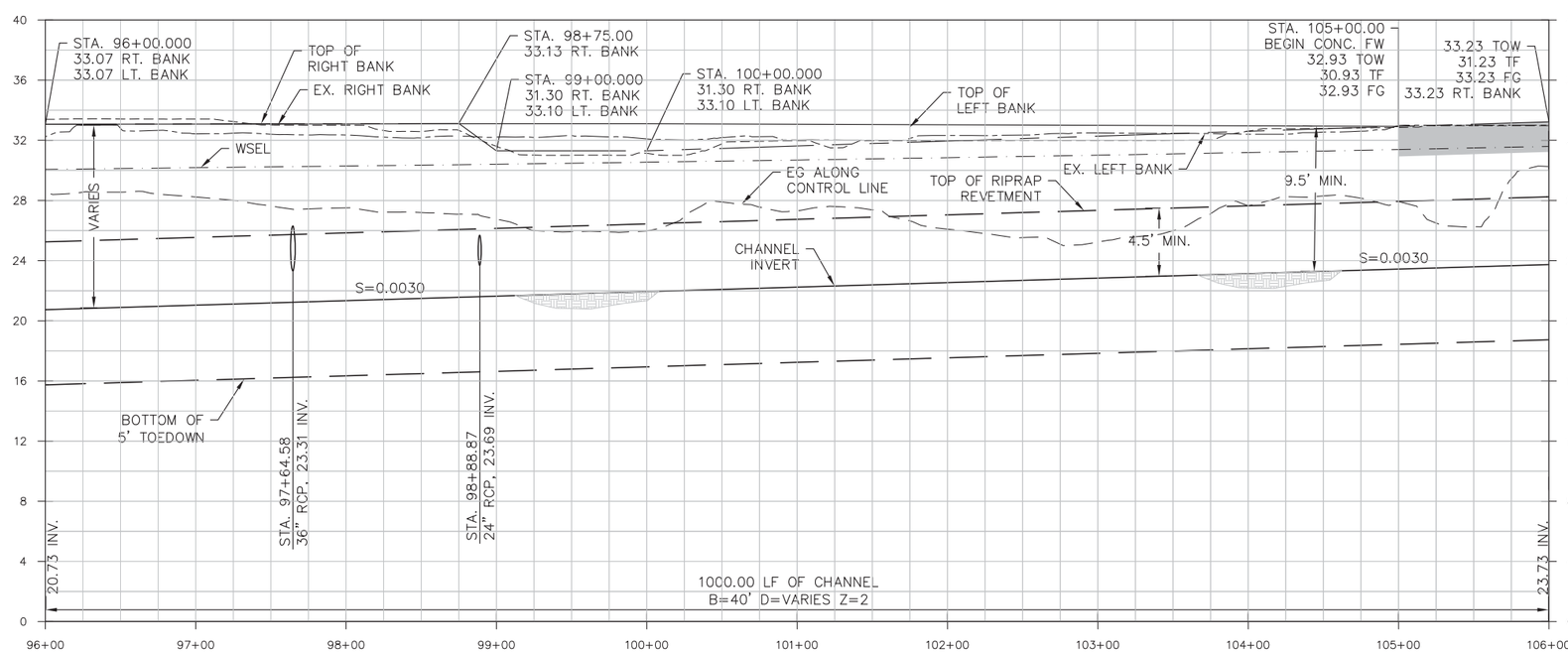

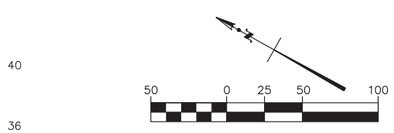

SCALE: 1"=50' (HORZ.)
1"=5' (VERT.)

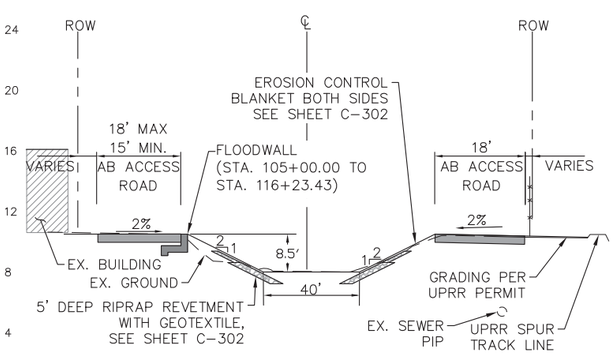

TYPICAL SECTION
N.T.S.

REGISTERED PROFESSIONAL ENGINEER
ARIC TORREYSON
NO. 66068
EXP. 6-30-18
CIVIL
STATE OF CALIFORNIA

US Army Corps of Engineers
San Francisco District
1455 Market Street
San Francisco, CA 94103

TETRA TECH
17885 VON KARMAN AVE., SUITE 500
IRVINE, CA 92614
Phone: (949) 809-5000

Mark	Description	Date	Appr.

DESIGNED BY: AMT
CHECKED BY: YHC
DRAWN BY: AWG
DATE: 8-4-2016
SHEET NO. 10 of 71
DRAWING NO.

PREPARED UNDER THE DIRECTION OF
JOHN C. MORROW
LT. COLONEL, C.E., DISTRICT COMMANDER

SUBMITTED:
Chief, Civil Design Section
APPROVAL RECOMMENDED:
Chief, Engineering Branch
APPROVED:
Chief, Engineering & Technical Services

SANTA CLARA COUNTY, CALIFORNIA
UPPER BERRYESSA CREEK FLOOD RISK MANAGEMENT PROJECT

PLAN AND PROFILE

STA. 96+00.00 TO STA. 106+00.00

Sheet reference number
C-101

CONFORMED DRAWING

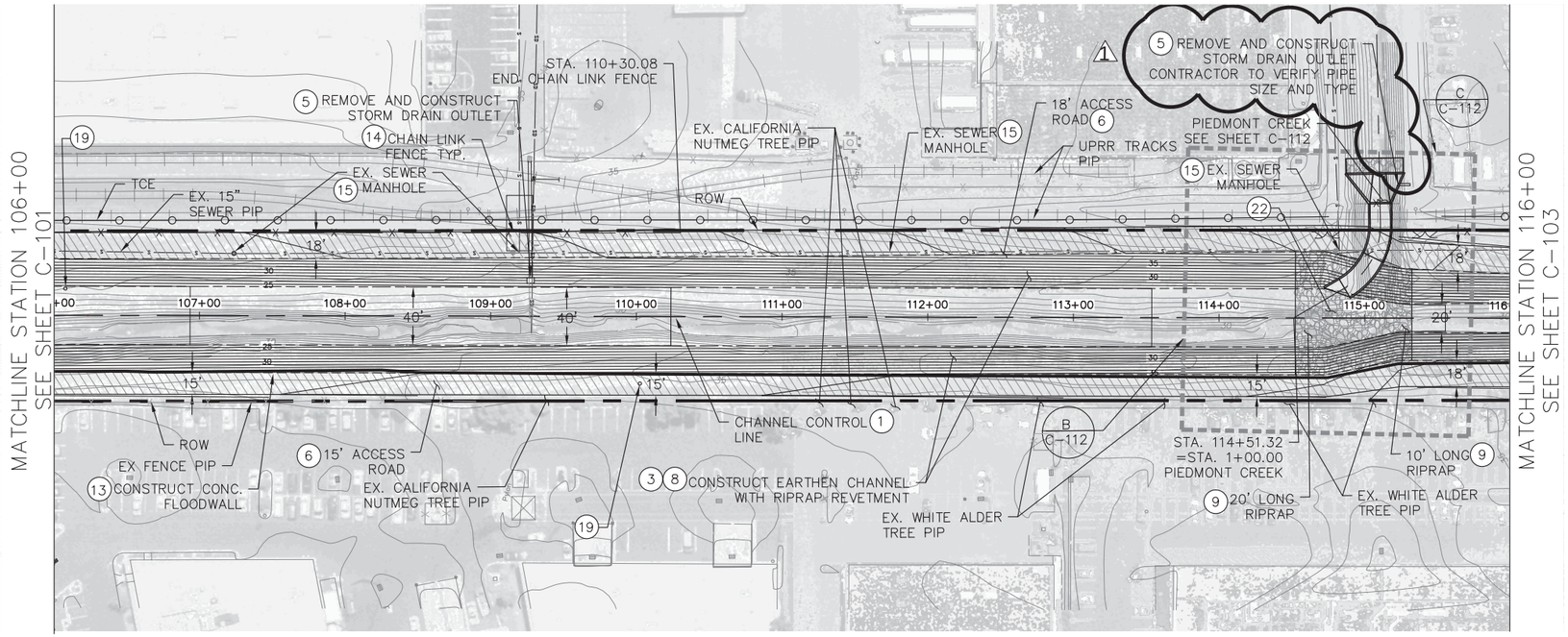

CONSTRUCTION NOTES

1. REMOVE EXISTING FEATURES TO CONSTRUCT IMPROVEMENTS AS SHOWN
3. CONSTRUCT EARTHEN CHANNEL WITH RIPRAP REVETMENT PER TYPICAL DETAILS AND CROSS SECTIONS AS SHOWN ON SHEETS C-200 AND C-201
5. REMOVE EXISTING AND CONSTRUCT NEW STORM DRAIN OUTLET AS SHOWN ON SHEET C-301
6. CONSTRUCT 6" AB ACCESS ROAD AS SHOWN ON THE PROFILE AND CROSS SECTIONS
8. CONSTRUCT RIPRAP REVETMENT PER DETAIL ON SHEET C-302
13. CONSTRUCT CONRETE FLOODWALL PER DETAILS ON SHEET S-105
14. CONSTRUCT 6' HIGH CHAIN LINK FENCE PER DETAIL ON SHEET C-303
15. ADJUST EX. SEWER MANHOLE TO FINISH GRADE AS NECESSARY PER DETAIL ON SHEET C-304
19. EX. MONITORING WELLS TO BE ABANDONED BY OTHERS FOLLOWING CONTRACTOR NOTIFICATION TO SCVWD. CONTRACTOR TO THEN REMOVE INTERFERING PORTIONS.
22. CONSTRUCT 24" THICK GROUTED RIPRAP REVETMENT PER DETAIL ON SHEET C-302

IN-CHANNEL CONSTRUCTION WORK IS NOT ALLOWED FROM CONTRACT AWARD AND NTP UNTIL MARCH 1, 2017 OR THE END OF THE RAINY SEASON AS DETERMINED/DIRECTED BY THE CONTRACTING OFFICER FROM STATION 87+21.43 TO STATION 120+00 AND FROM STATION 159+50 TO STATION 179+00. THIS IS TO LIMIT THE POTENTIAL FOR DOWNSTREAM FLOODING. WORK IN ALL OTHER AREAS IS ALLOWED ANYTIME IT IS NOT PRECLUDED BY ANY AND ALL OTHER REQUIREMENTS.

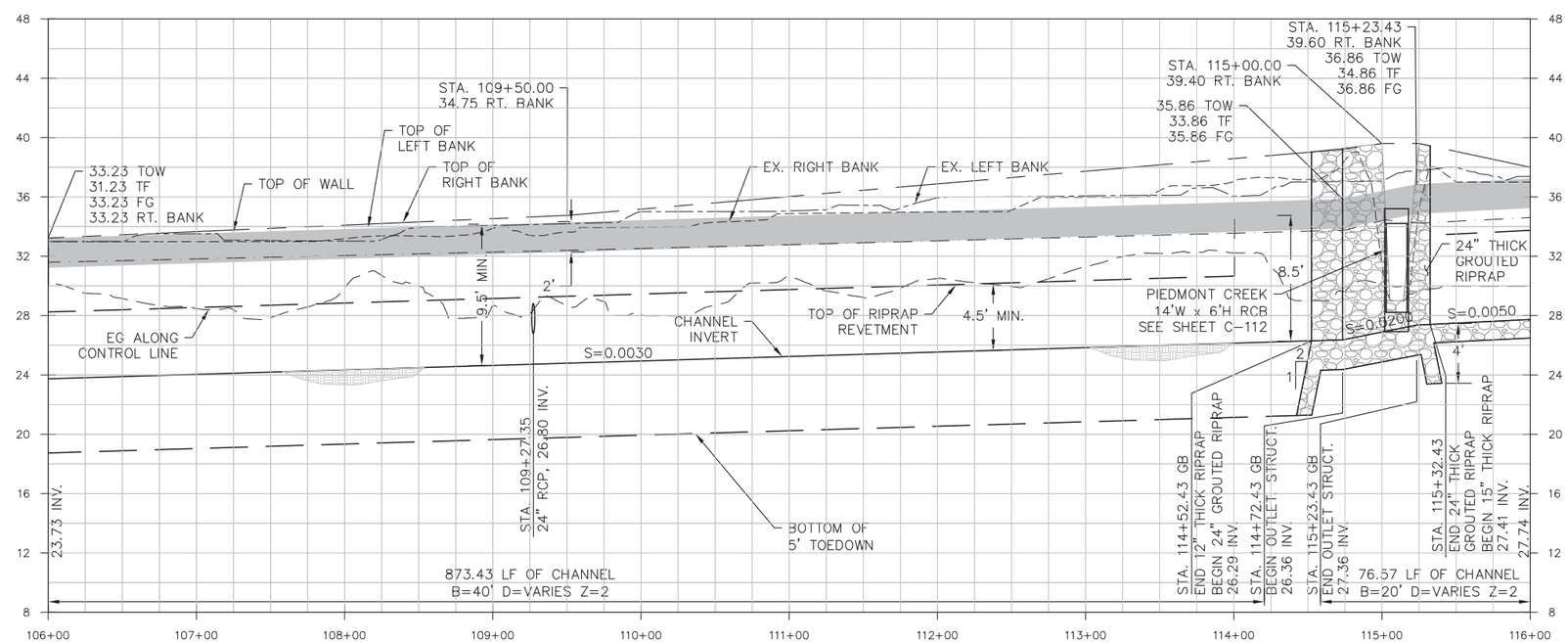

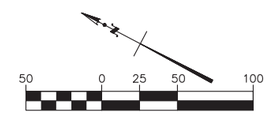

SCALE: 1"=50' (HORZ.)
1"=5' (VERT.)

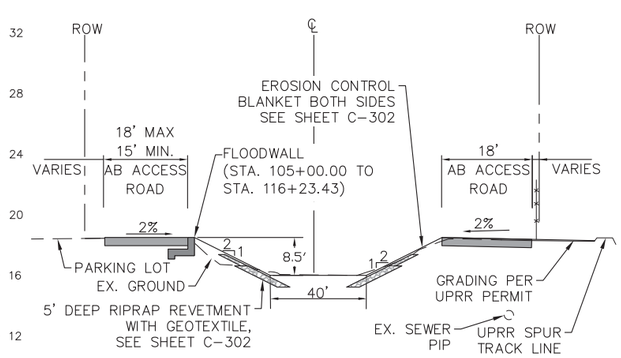

TYPICAL SECTION
N.T.S.

REGISTERED PROFESSIONAL ENGINEER
ARIC TORREYSON
NO. 66068
EXP. 6-30-18
CIVIL
STATE OF CALIFORNIA

US Army Corps of Engineers
San Francisco District
1455 Market Street
San Francisco, CA 94103

TETRA TECH
17885 VON KARMAN AVE., SUITE 500
IRVINE, CA 92614
Phone: (949) 809-5000

Mark	Description	Date	Appr.
1	ADD STORM DRAIN OUTLET STRUCTURE	7/6/16	

DESIGNED BY: AMT
CHECKED BY: YHC
DRAWN BY: AWG
DATE: 8-4-2016
SHEET NO. 11 of 71
DRAWING NO.

PREPARED UNDER THE DIRECTION OF
JOHN C. MORROW
LT. COLONEL, C.E., DISTRICT COMMANDER

SUBMITTED:
Chief, Civil Design Section
APPROVAL RECOMMENDED:
Chief, Engineering Branch
APPROVED:
Chief, Engineering & Technical Services

SANTA CLARA COUNTY, CALIFORNIA
UPPER BERRYESSA CREEK FLOOD RISK MANAGEMENT PROJECT
PLAN AND PROFILE
STA. 106+00.00 TO STA. 116+00.00

Sheet reference number
C-102

P:\Wat\T31331 Berryessa Design SCVWD\11 Design\01 Final Design\Sheets\ PP - (3).dwg 02 Aug 2016 - 6:43pm

CONFORMED DRAWING

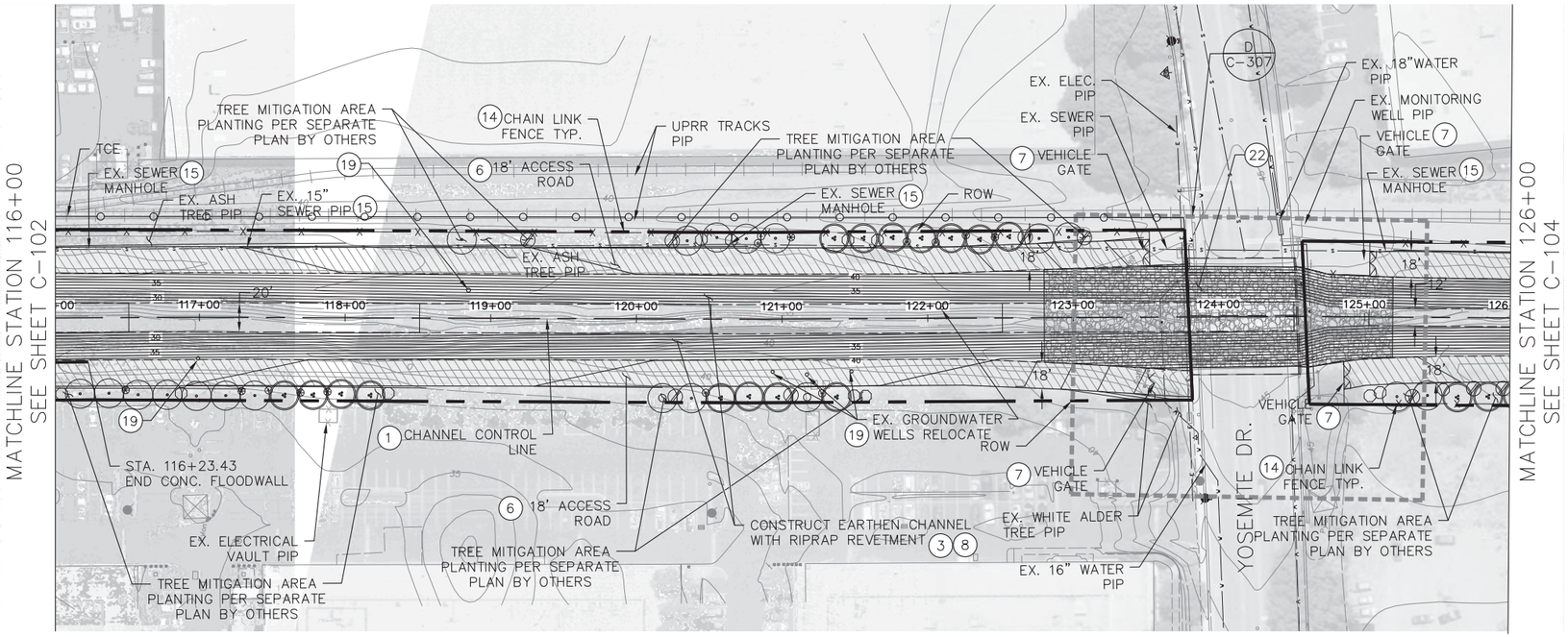

CONSTRUCTION NOTES

1. REMOVE EXISTING FEATURES TO CONSTRUCT IMPROVEMENTS AS SHOWN
3. CONSTRUCT EARTHEN CHANNEL WITH RIPRAP REVETMENT PER TYPICAL DETAILS AND CROSS SECTIONS AS SHOWN ON SHEETS C-200 AND C-201
6. CONSTRUCT 6" AB ACCESS ROAD AS SHOWN ON THE PROFILE AND CROSS SECTIONS
7. REMOVE EXISTING AND CONSTRUCT NEW DOUBLE SWING GATE PER DETAIL ON SHEET C-303
8. CONSTRUCT RIPRAP REVETMENT PER DETAIL ON SHEET C-302
14. CONSTRUCT 6' HIGH CHAIN LINK FENCE PER DETAIL ON SHEET C-303
15. ADJUST EX. SEWER MANHOLE TO FINISH GRADE AS NECESSARY PER DETAIL ON SHEET C-304
19. EX. MONITORING WELLS TO BE ABANDONED BY OTHERS FOLLOWING CONTRACTOR NOTIFICATION TO SCVWD. CONTRACTOR TO THEN REMOVE INTERFERING PORTIONS.
22. CONSTRUCT 24" THICK GROUTED RIPRAP REVETMENT PER DETAIL ON SHEET C-302

IN-CHANNEL CONSTRUCTION WORK IS NOT ALLOWED FROM CONTRACT AWARD AND NTP UNTIL MARCH 1, 2017 OR THE END OF THE RAINY SEASON AS DETERMINED/DIRECTED BY THE CONTRACTING OFFICER FROM STATION 87+21.43 TO STATION 120+00 AND FROM STATION 159+50 TO STATION 179+00. THIS IS TO LIMIT THE POTENTIAL FOR DOWNSTREAM FLOODING. WORK IN ALL OTHER AREAS IS ALLOWED ANYTIME IT IS NOT PRECLUDED BY ANY AND ALL OTHER REQUIREMENTS.

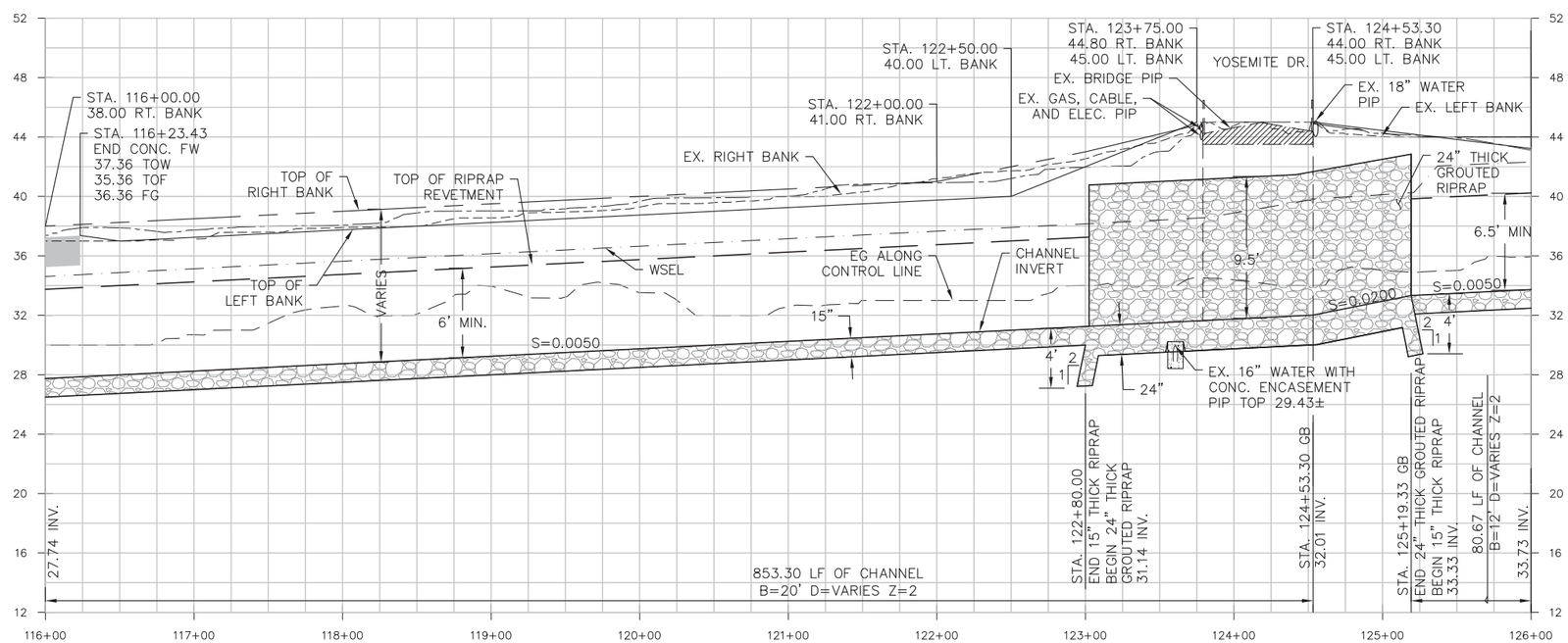

PROFILE NOTE: EXISTING UTILITIES ON ROADWAY CROSSINGS ARE TO BE PROTECTED IN PLACE AND NOT SHOWN ON PROFILE VIEW. PLEASE SEE APPROXIMATE LOCATION OF EXISTING UTILITIES ON PLAN VIEW.

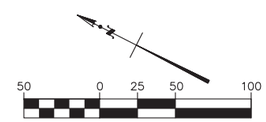

SCALE: 1"=50' (HORZ.)
1"=5' (VERT.)

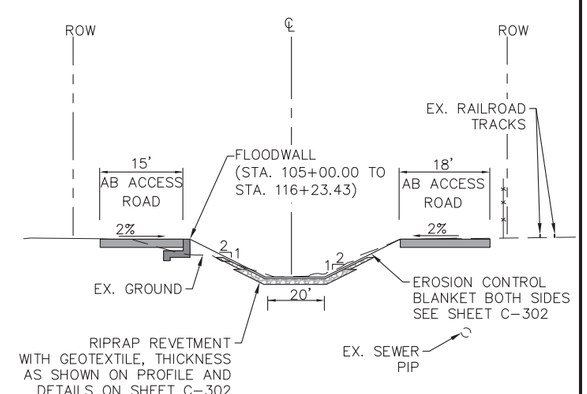

TYPICAL SECTION
N.T.S.

US Army Corps of Engineers
San Francisco District
1455 Market Street
San Francisco, CA 94103

TETRA TECH
1788S VON KARMAN AVE., SUITE 500
IRVINE, CA 92614
Phone: (949) 809-5000

Mark	Description	Date	Appr.

DESIGNED BY: AMT
CHECKED BY: YHC
DRAWN BY: AWG
DATE: 8-4-2016
SHEET NO. 12 of 71
DRAWING NO.

SUBMITTED:
Chief, Civil Design Section
APPROVAL RECOMMENDED:
Chief, Engineering Branch
APPROVED:
Chief, Engineering & Technical Services

PREPARED UNDER THE DIRECTION OF
JOHN C. MORROW
LT. COLONEL, C.E., DISTRICT COMMANDER

SANTA CLARA COUNTY, CALIFORNIA
UPPER BERRYESSA CREEK FLOOD RISK MANAGEMENT PROJECT

PLAN AND PROFILE

STA. 116+00.00 TO STA. 126+00.00

Sheet reference number
C-103

P:\Wat\T31331 Berryessa Design SCVWD\11 Design\01 Final Design\Sheets\ PP - (4).dwg 02 Aug 2016 - 6:49pm

CONFORMED DRAWING

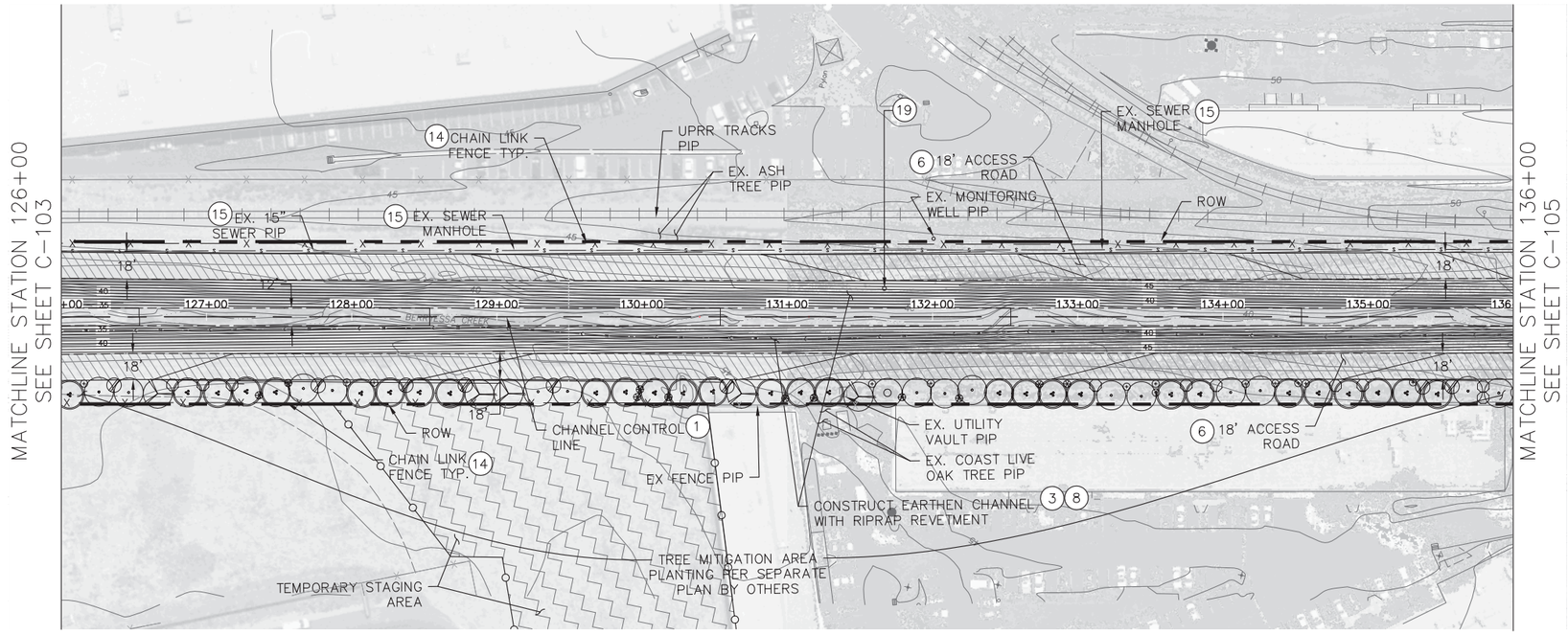

CONSTRUCTION NOTES

1. REMOVE EXISTING FEATURES TO CONSTRUCT IMPROVEMENTS AS SHOWN
3. CONSTRUCT EARTHEN CHANNEL WITH RIPRAP REVETMENT PER TYPICAL DETAILS AND CROSS SECTIONS AS SHOWN ON SHEETS C-200 AND C-201
6. CONSTRUCT 6" AB ACCESS ROAD AS SHOWN ON THE PROFILE AND CROSS SECTIONS
8. CONSTRUCT RIPRAP REVETMENT PER DETAIL ON SHEET C-302
14. CONSTRUCT 6' HIGH CHAIN LINK FENCE PER DETAIL ON SHEET C-303
15. ADJUST EX. SEWER MANHOLE TO FINISH GRADE AS NECESSARY PER DETAIL ON SHEET C-304
19. EX. MONITORING WELLS TO BE ABANDONED BY OTHERS FOLLOWING CONTRACTOR NOTIFICATION TO SCVWD. CONTRACTOR TO THEN REMOVE INTERFERING PORTIONS.

IN-CHANNEL CONSTRUCTION WORK IS NOT ALLOWED FROM CONTRACT AWARD AND NTP UNTIL MARCH 1, 2017 OR THE END OF THE RAINY SEASON AS DETERMINED/DIRECTED BY THE CONTRACTING OFFICER FROM STATION 87+21.43 TO STATION 120+00 AND FROM STATION 159+50 TO STATION 179+00. THIS IS TO LIMIT THE POTENTIAL FOR DOWNSTREAM FLOODING. WORK IN ALL OTHER AREAS IS ALLOWED ANYTIME IT IS NOT PRECLUDED BY ANY AND ALL OTHER REQUIREMENTS.

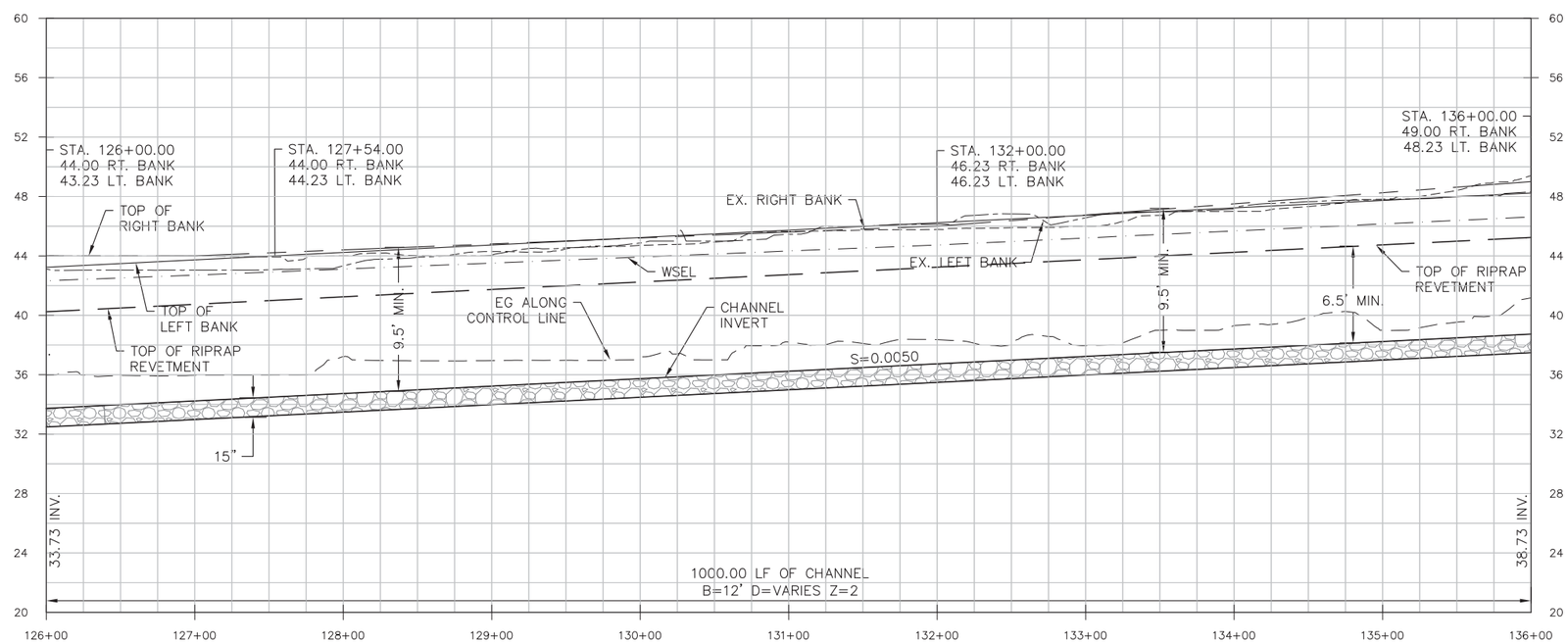

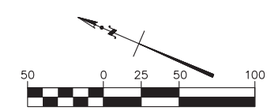

SCALE: 1"=50' (HORZ.)
1"=5' (VERT.)

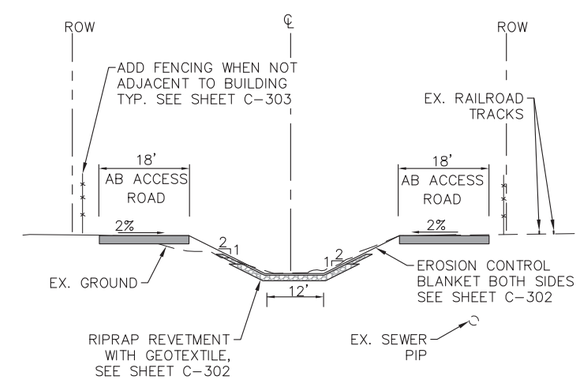

TYPICAL SECTION
N.T.S.

REGISTERED PROFESSIONAL ENGINEER
ARIC TORREYSON
NO. 66068
EXP. 6-30-18
CIVIL
STATE OF CALIFORNIA

US Army Corps of Engineers
San Francisco District
1455 Market Street
San Francisco, CA 94103

TETRA TECH
17885 VON KARMAN AVE., SUITE 500
IRVINE, CA 92614
Phone: (949) 809-5000

Mark	Description	Date	Appr.

SUBMITTED:
Chief, Civil Design Section
APPROVAL RECOMMENDED:
Chief, Engineering Branch
APPROVED:
Chief, Engineering & Technical Services

DESIGNED BY: AMT
CHECKED BY: YHC
DRAWN BY: AWG
DATE: 8-4-2016
SHEET NO. 13 of 71
DRAWING NO.

PREPARED UNDER THE DIRECTION OF
JOHN C. MORROW
LT. COLONEL, C.E., DISTRICT COMMANDER

SANTA CLARA COUNTY, CALIFORNIA
UPPER BERRYESSA CREEK FLOOD RISK MANAGEMENT PROJECT

PLAN AND PROFILE

STA. 126+00.00 TO STA. 136+00.00

Sheet reference number
C-104

P:\Wat\T31331 Berryessa Design SCVWD\11 Design\01 Final Design\Sheets\ PP - (5).dwg 02 Aug 2016 - 6:54pm

CONFORMED DRAWING

NOTE: CONTRACTOR CAN NOT CROSS OVER UPRR TRACKS WITHOUT PRIOR APPORVAL

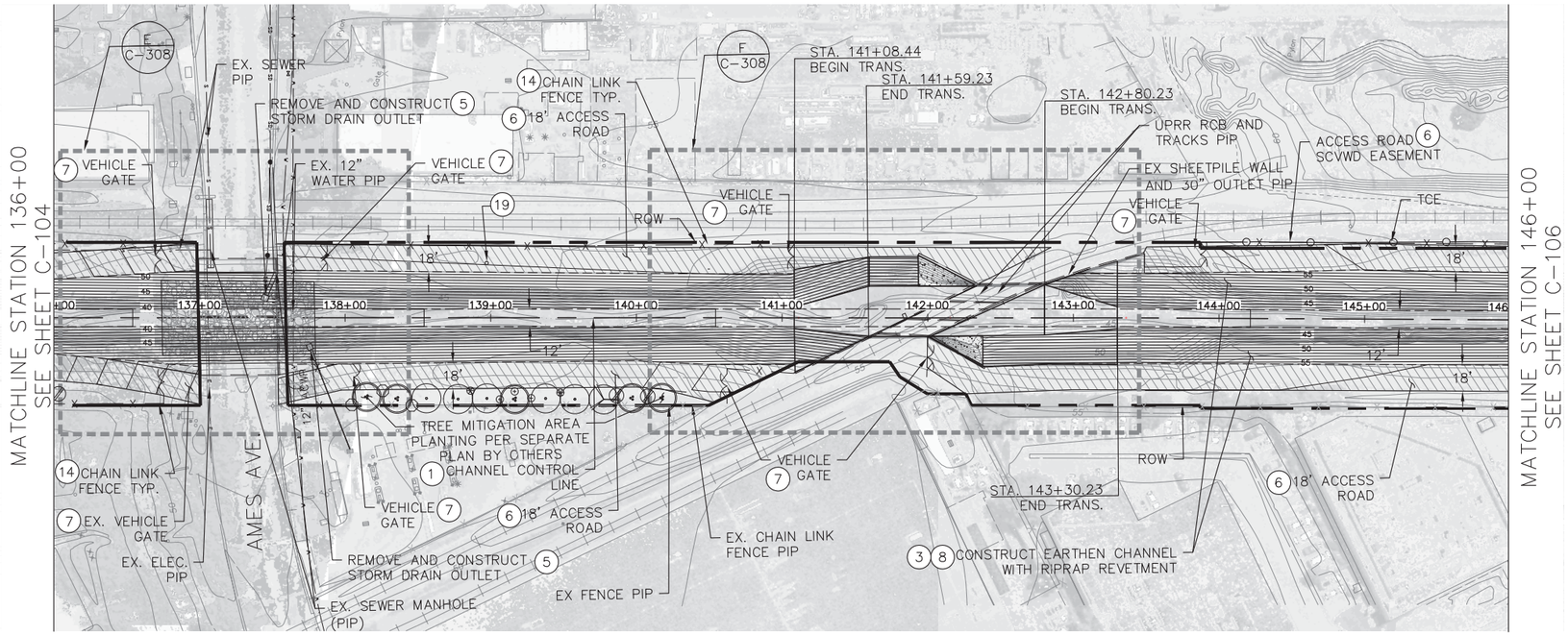

CONSTRUCTION NOTES

1. REMOVE EXISTING FEATURES TO CONSTRUCT IMPROVEMENTS AS SHOWN
3. CONSTRUCT EARTHEN CHANNEL WITH RIPRAP REVETMENT PER TYPICAL DETAILS AND CROSS SECTIONS AS SHOWN ON SHEETS C-200 AND C-201
5. REMOVE EXISTING AND CONSTRUCT NEW STORM DRAIN OUTLET AS SHOWN ON SHEET C-301
6. CONSTRUCT 6" AB ACCESS ROAD AS SHOWN ON THE PROFILE AND CROSS SECTIONS
7. REMOVE EXISTING AND CONSTRUCT NEW DOUBLE SWING GATE PER DETAIL ON SHEET C-303
8. CONSTRUCT RIPRAP REVETMENT PER DETAIL ON SHEET C-302
14. CONSTRUCT 6' HIGH CHAIN LINK FENCE PER DETAIL ON SHEET C-303
19. EX. MONITORING WELLS TO BE ABANDONED BY OTHERS FOLLOWING CONTRACTOR NOTIFICATION TO SCVWD. CONTRACTOR TO THEN REMOVE INTERFERING PORTIONS.
22. CONSTRUCT 24" THICK GROUTED RIPRAP REVETMENT PER DETAIL ON SHEET C-302

IN-CHANNEL CONSTRUCTION WORK IS NOT ALLOWED FROM CONTRACT AWARD AND NTP UNTIL MARCH 1, 2017 OR THE END OF THE RAINY SEASON AS DETERMINED/DIRECTED BY THE CONTRACTING OFFICER FROM STATION 87+21.43 TO STATION 120+00 AND FROM STATION 159+50 TO STATION 179+00. THIS IS TO LIMIT THE POTENTIAL FOR DOWNSTREAM FLOODING. WORK IN ALL OTHER AREAS IS ALLOWED ANYTIME IT IS NOT PRECLUDED BY ANY AND ALL OTHER REQUIREMENTS.

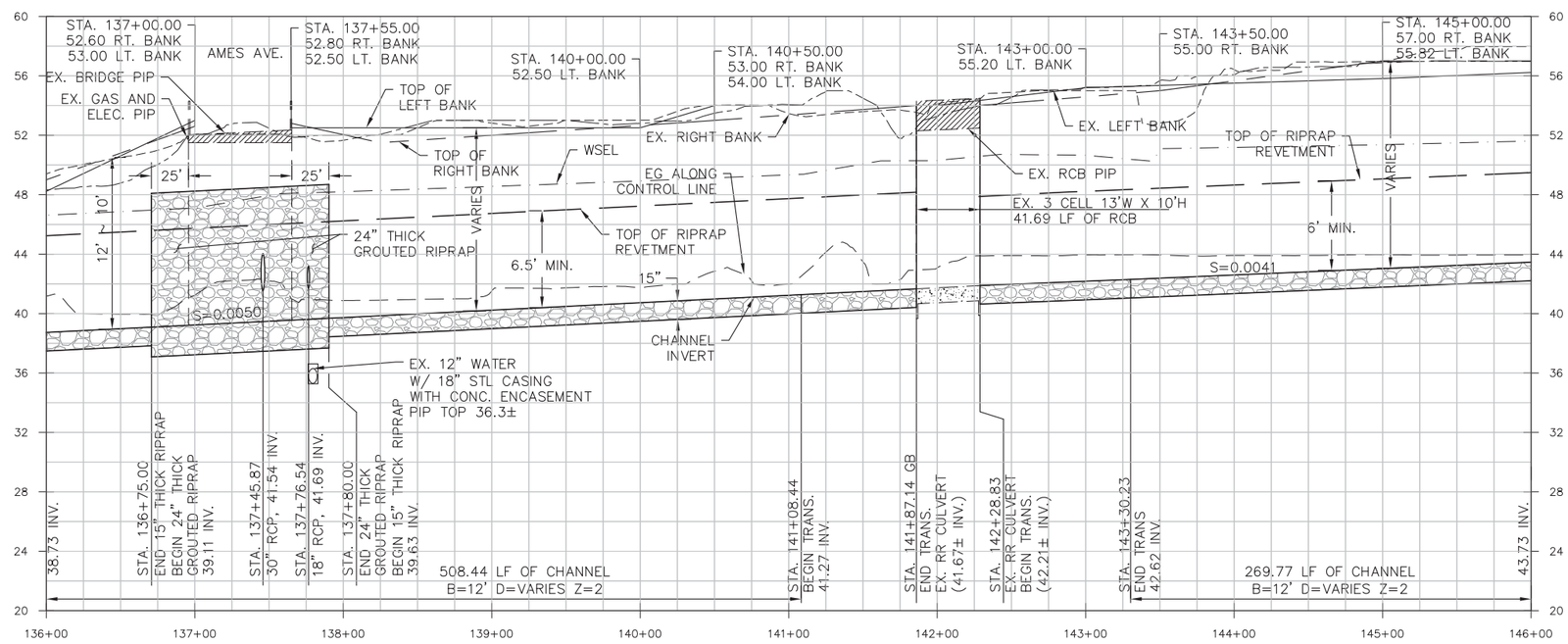

PROFILE NOTE: EXISTING UTILITIES ON ROADWAY CROSSINGS ARE TO BE PROTECTED IN PLACE AND NOT SHOWN ON PROFILE VIEW. PLEASE SEE APPROXIMATE LOCATION OF EXISTING UTILITIES ON PLAN VIEW.

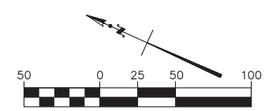

SCALE: 1"=50' (HORZ.)
1"=5' (VERT.)

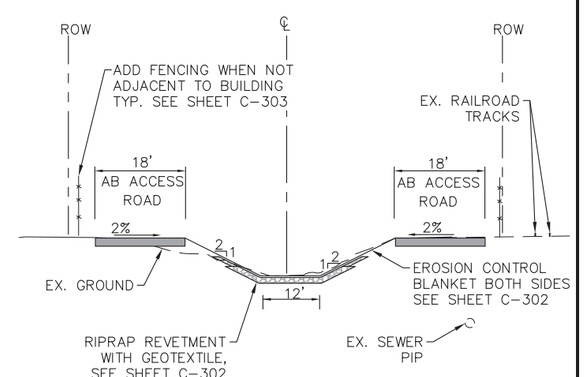

TYPICAL SECTION
N.T.S.

REGISTERED PROFESSIONAL ENGINEER ARIC TORREYSON NO. 66068 EXP. 6-30-18 CIVIL STATE OF CALIFORNIA

US Army Corps of Engineers
San Francisco District
1455 Market Street
San Francisco, CA 94103

TETRA TECH
17885 VON KARMAN AVE., SUITE 500
IRVINE, CA 92614
Phone: (949) 809-5000

Mark	Description	Date	Appr.

DESIGNED BY: AMT
CHECKED BY: YHC
DRAWN BY: AWG
DATE: 8-4-2016
SHEET NO. 14 of 71
DRAWING NO.

SUBMITTED: Chief, Civil Design Section
APPROVAL RECOMMENDED: Chief, Engineering Branch
APPROVED: Chief, Engineering & Technical Services

PREPARED UNDER THE DIRECTION OF JOHN C. MORROW LT. COLONEL, C.E., DISTRICT COMMANDER

SANTA CLARA COUNTY, CALIFORNIA
UPPER BERRYESSA CREEK FLOOD RISK MANAGEMENT PROJECT
PLAN AND PROFILE
STA. 136+00.00 TO STA. 146+00.00

Sheet reference number C-105

P:\Wat\T31331 Berryessa Design SCVWD\11 Design\01 Final Design\Sheets\ PP - (6).dwg 02 Aug 2016 - 6:59pm

CONFORMED DRAWING

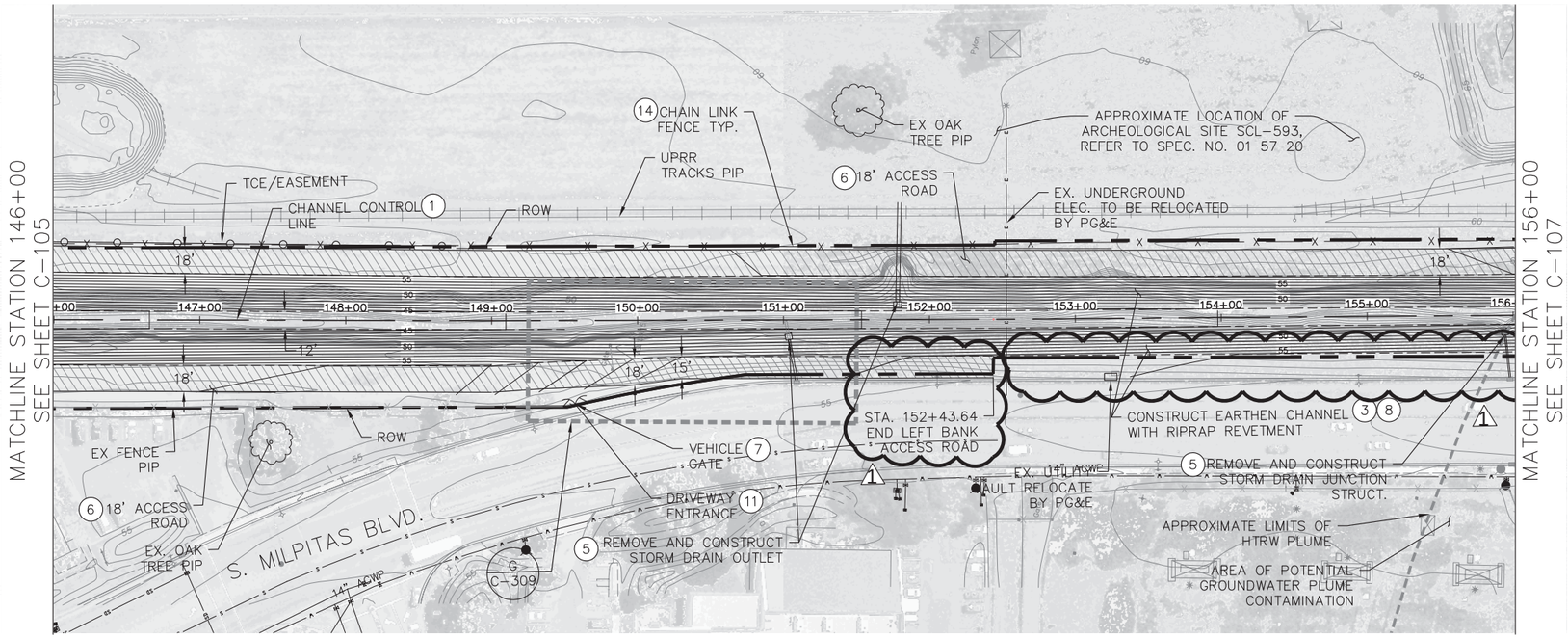

CONSTRUCTION NOTES

1. REMOVE EXISTING FEATURES TO CONSTRUCT IMPROVEMENTS AS SHOWN
3. CONSTRUCT EARTHEN CHANNEL WITH RIPRAP REVETMENT PER TYPICAL DETAILS AND CROSS SECTIONS AS SHOWN ON SHEETS C-200 AND C-201
5. REMOVE EXISTING AND CONSTRUCT NEW STORM DRAIN OUTLET AS SHOWN ON SHEET C-301
6. CONSTRUCT 6" AB ACCESS ROAD AS SHOWN ON THE PROFILE AND CROSS SECTIONS
7. REMOVE EXISTING AND CONSTRUCT NEW DOUBLE SWING GATE PER DETAIL ON SHEET C-303
8. CONSTRUCT RIPRAP REVETMENT PER DETAIL ON SHEET C-302
11. CONSTRUCT DRIVEWAY ENTRANCE PER CITY OF MILPITAS STD PLAN 432 AS SHOWN ON SHEET C-302
14. CONSTRUCT 6' HIGH CHAIN LINK FENCE PER DETAIL ON SHEET C-303

IN-CHANNEL CONSTRUCTION WORK IS NOT ALLOWED FROM CONTRACT AWARD AND NTP UNTIL MARCH 1, 2017 OR THE END OF THE RAINY SEASON AS DETERMINED/DIRECTED BY THE CONTRACTING OFFICER FROM STATION 87+21.43 TO STATION 120+00 AND FROM STATION 159+50 TO STATION 179+00. THIS IS TO LIMIT THE POTENTIAL FOR DOWNSTREAM FLOODING. WORK IN ALL OTHER AREAS IS ALLOWED ANYTIME IT IS NOT PRECLUDED BY ANY AND ALL OTHER REQUIREMENTS.

NOTE: FUTURE S. MILPITAS BOULEVARD WIDENING PROJECT, AB ACCESS ROAD WIDTH TO BE NARROWED AS REQUIRED.

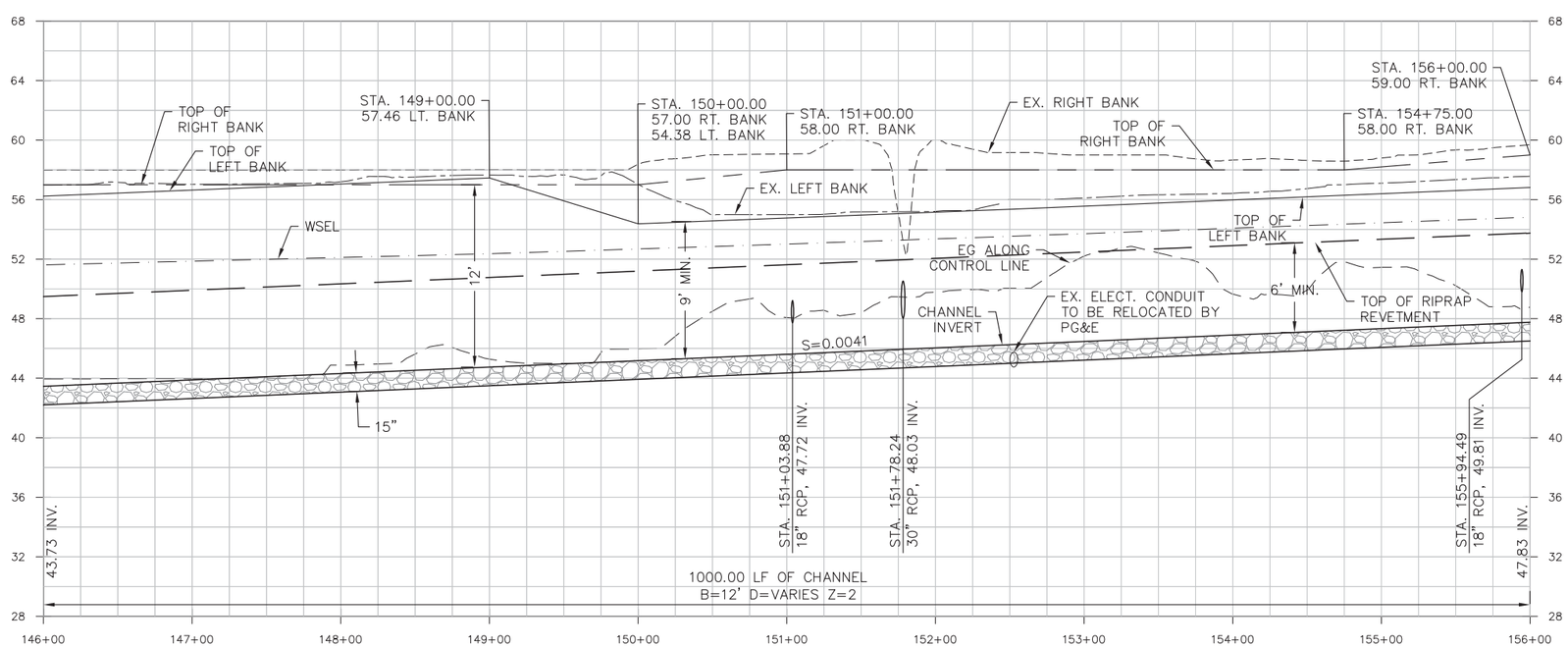

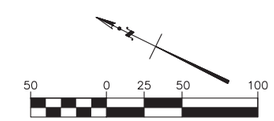

SCALE: 1"=50' (HORZ.)
1"=5' (VERT.)

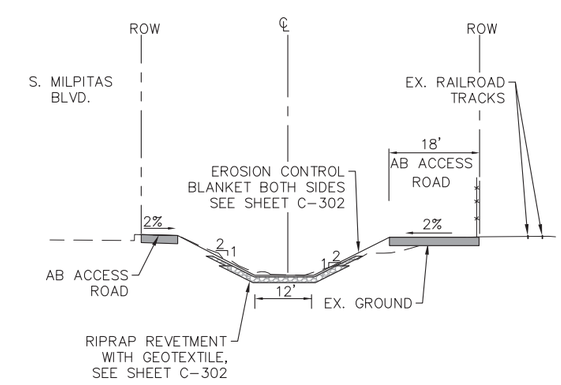

TYPICAL SECTION

N.T.S.

REGISTERED PROFESSIONAL ENGINEER
ARIC TORREYSON
NO. 66068
EXP. 6-30-18
CIVIL
STATE OF CALIFORNIA

US Army Corps of Engineers
San Francisco District
1455 Market Street
San Francisco, CA 94103

TETRA TECH
17885 VON KARMAN AVE., SUITE 500
IRVINE, CA 92614
Phone: (949) 809-5000

Mark	Description	Date	Appr.
1	LEFT BANK ACCESS ROAD DELETED	7/6/16	

DESIGNED BY: AMT
CHECKED BY: YHC
DRAWN BY: AWG
DATE: 8-4-2016
SHEET NO. 15 of 71
DRAWING NO.

SUBMITTED:
Chief, Civil Design Section
APPROVAL RECOMMENDED:
Chief, Engineering Branch
APPROVED:
Chief, Engineering & Technical Services

PREPARED UNDER THE DIRECTION OF
JOHN C. MORROW
LT. COLONEL, C.E., DISTRICT COMMANDER

SANTA CLARA COUNTY, CALIFORNIA
UPPER BERRYESSA CREEK FLOOD RISK MANAGEMENT PROJECT

PLAN AND PROFILE

STA. 146+00.00 TO STA. 156+00.00

Sheet reference number
C-106

CONFORMED DRAWING

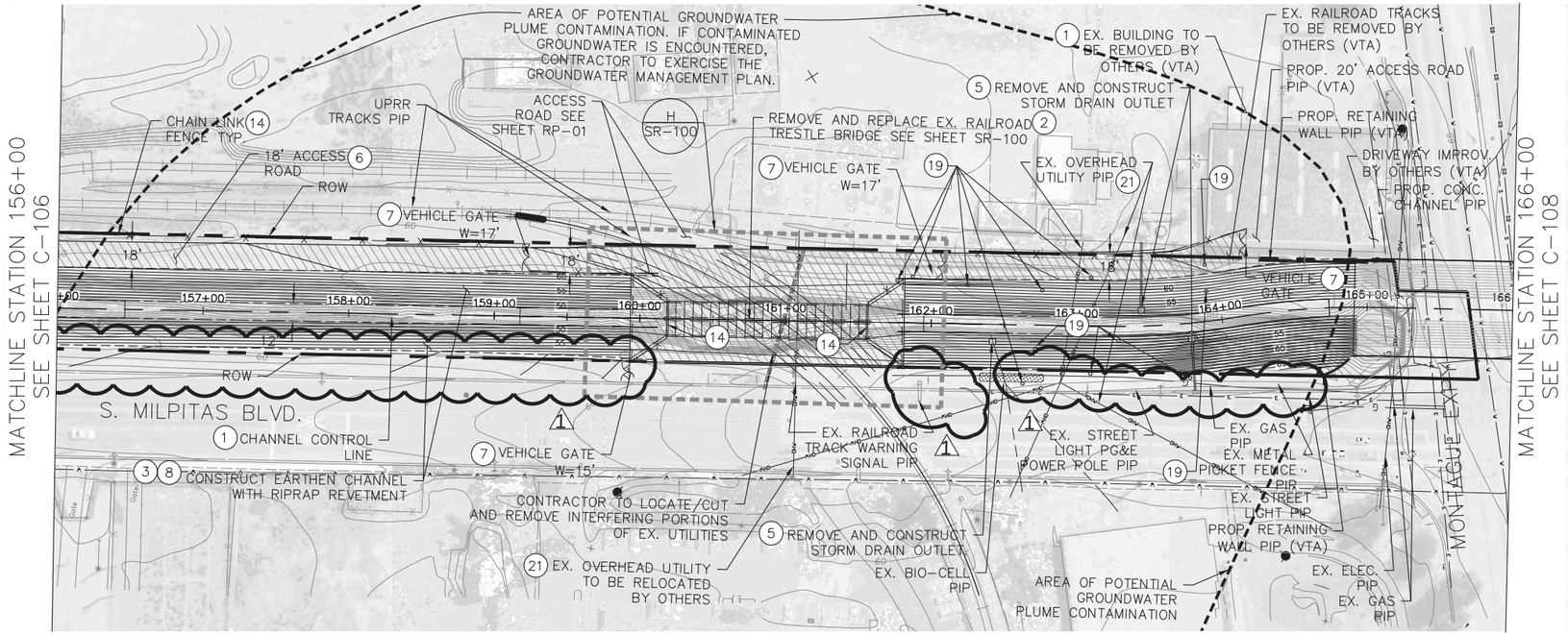

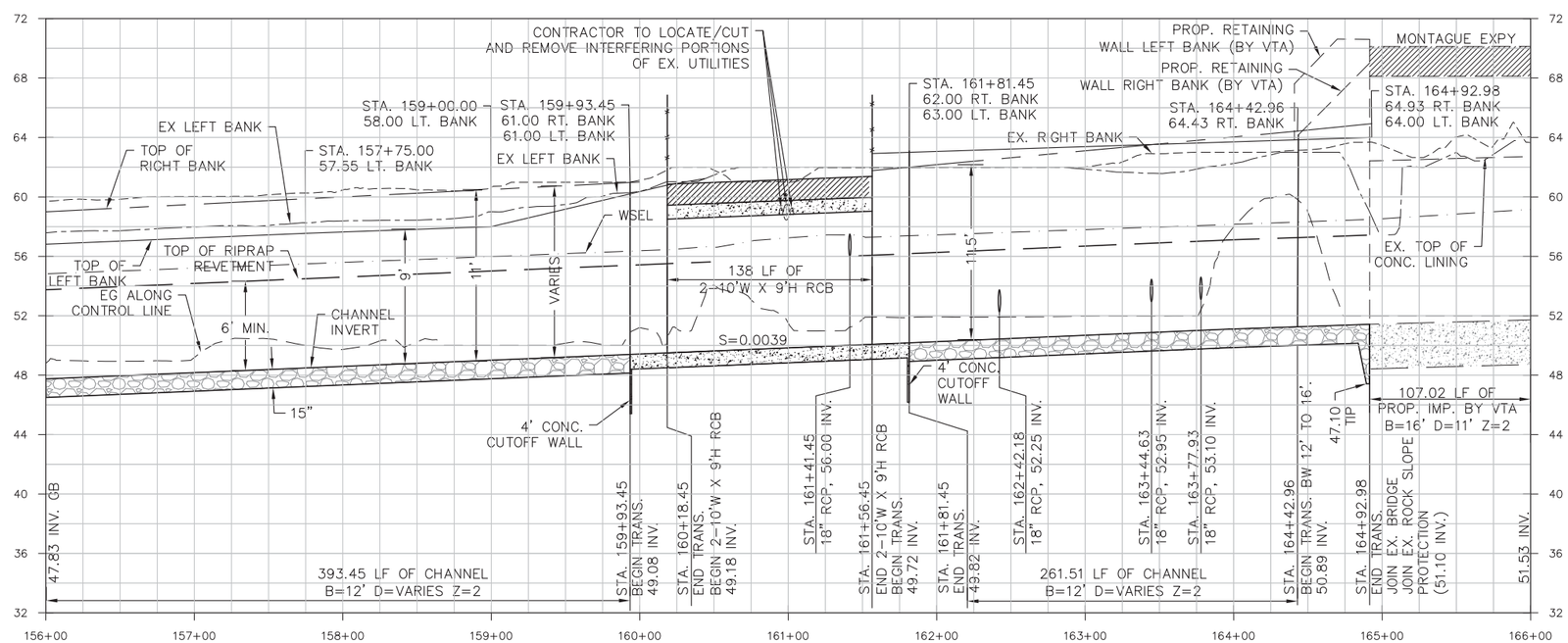

PROFILE NOTE: EXISTING UTILITIES ON ROADWAY CROSSINGS ARE TO BE PROTECTED IN PLACE AND NOT SHOWN ON PROFILE VIEW. PLEASE SEE APPROXIMATE LOCATION OF EXISTING UTILITIES ON PLAN VIEW.

CONSTRUCTION NOTES

1. REMOVE EXISTING FEATURES TO CONSTRUCT IMPROVEMENTS AS SHOWN
2. CONSTRUCT RAILROAD IMPROVEMENTS PER DETAILS ON SHEET SR-100
3. CONSTRUCT EARTHEN CHANNEL WITH RIPRAP REVETMENT PER TYPICAL DETAILS AND CROSS SECTIONS AS SHOWN ON SHEETS C-200 AND C-201
5. REMOVE EXISTING AND CONSTRUCT NEW STORM DRAIN OUTLET AS SHOWN ON SHEET C-301
6. CONSTRUCT 6" AB ACCESS ROAD AS SHOWN ON THE PROFILE AND CROSS SECTIONS
7. REMOVE EXISTING AND CONSTRUCT NEW DOUBLE SWING GATE PER DETAIL ON SHEET C-303
8. CONSTRUCT RIPRAP REVETMENT PER DETAIL ON SHEET C-302
9. CONSTRUCT 24" THICK RIPRAP REVETMENT PER DETAIL ON SHEET C-302
14. CONSTRUCT 6' HIGH CHAIN LINK FENCE PER DETAIL ON SHEET C-303
19. EX. MONITORING WELLS TO BE ABANDONED BY OTHERS FOLLOWING CONTRACTOR NOTIFICATION TO SCVWD. CONTRACTOR TO THEN REMOVE INTERFERING PORTIONS.
21. CONTRACTOR TO USE EXTREME CAUTION WHILE WORKING UNDERNEATH OVERHEAD POWER LINES

IN-CHANNEL CONSTRUCTION WORK IS NOT ALLOWED FROM CONTRACT AWARD AND NTP UNTIL MARCH 1, 2017 OR THE END OF THE RAINY SEASON AS DETERMINED/DIRECTED BY THE CONTRACTING OFFICER FROM STATION 87+21.43 TO STATION 120+00 AND FROM STATION 159+50 TO STATION 179+00. THIS IS TO LIMIT THE POTENTIAL FOR DOWNSTREAM FLOODING. WORK IN ALL OTHER AREAS IS ALLOWED ANYTIME IT IS NOT PRECLUDED BY ANY AND ALL OTHER REQUIREMENTS.

NOTE: FUTURE S. MILPITAS BOULEVARD WIDENING PROJECT, AB ACCESS ROAD WIDTH TO BE NARROWED AS REQUIRED.

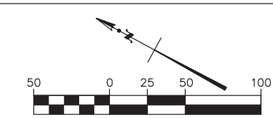

SCALE: 1"=50' (HORZ.)
1"=5' (VERT.)

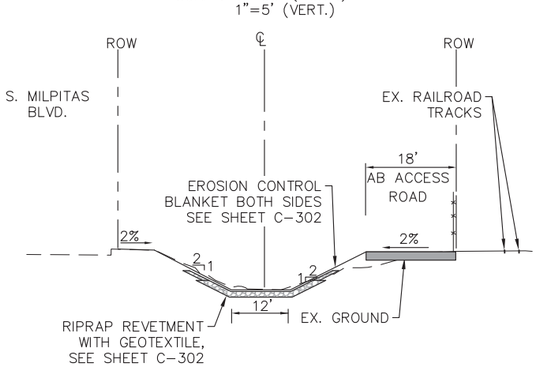

TYPICAL SECTION

N.T.S.

REGISTERED PROFESSIONAL ENGINEER ARIC TORREYSON NO. 66068 EXP. 6-30-18 CIVIL STATE OF CALIFORNIA

US Army Corps of Engineers
San Francisco District
1455 Market Street
San Francisco, CA 94103

TETRA TECH
17885 VON KARMAN AVE., SUITE 500
IRVINE, CA 92614
Phone: (949) 809-5000

Mark	Description	Date	Appr.
1	LEFT BANK ACCESS ROAD AND PROP. GATE DELETED	7/6/16	

DESIGNED BY: AMT
CHECKED BY: YHC
DRAWN BY: AWG
DATE: 8-4-2016
SHEET NO. 16 of 71
DRAWING NO.

SUBMITTED:
Chief, Civil Design Section
APPROVAL RECOMMENDED:
Chief, Engineering Branch
APPROVED:
Chief, Engineering & Technical Services

PREPARED UNDER THE DIRECTION OF
JOHN C. MORROW
LT. COLONEL, C.E., DISTRICT COMMANDER

SANTA CLARA COUNTY, CALIFORNIA
UPPER BERRYESSA CREEK FLOOD RISK MANAGEMENT PROJECT

PLAN AND PROFILE

STA. 156+00.00 TO STA. 166+00.00

Sheet reference number
C-107

CONFORMED DRAWING

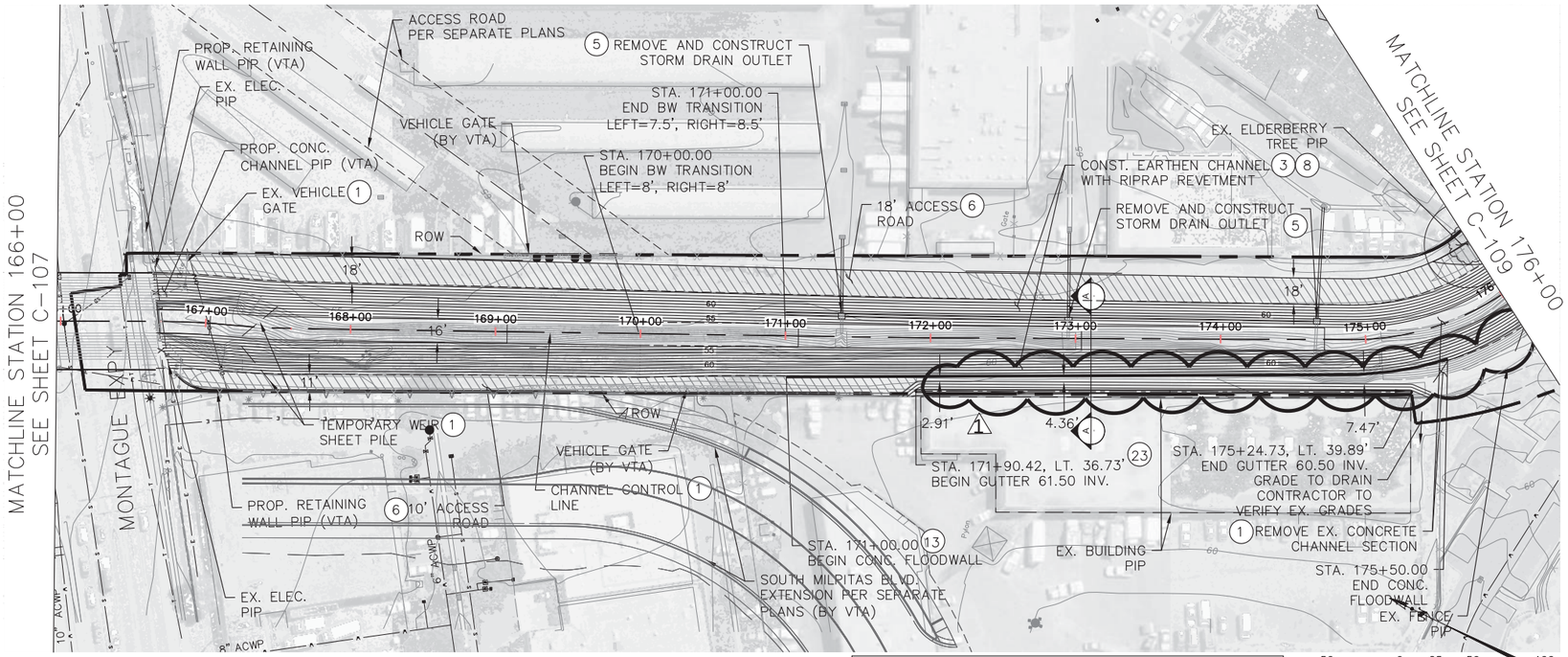

PROFILE NOTE: EXISTING UTILITIES ON ROADWAY CROSSINGS ARE TO BE PROTECTED IN PLACE AND NOT SHOWN ON PROFILE VIEW. PLEASE SEE APPROXIMATE LOCATION OF EXISTING UTILITIES ON PLAN VIEW.

NOTE: CONTRACTOR TO SURVEY THE EXISTING LEFT BANK GROUND BETWEEN STATIONS 171+00 TO 176+00 AND VERIFY FOR POSITIVE DRAINAGE INTO THE LOT.

IN-CHANNEL CONSTRUCTION WORK IS NOT ALLOWED FROM CONTRACT AWARD AND NTP UNTIL MARCH 1, 2017 OR THE END OF THE RAINY SEASON AS DETERMINED/DIRECTED BY THE CONTRACTING OFFICER FROM STATION 87+21.43 TO STATION 120+00 AND FROM STATION 159+50 TO STATION 179+00. THIS IS TO LIMIT THE POTENTIAL FOR DOWNSTREAM FLOODING. WORK IN ALL OTHER AREAS IS ALLOWED ANYTIME IT IS NOT PRECLUDED BY ANY AND ALL OTHER REQUIREMENTS.

50 0 25 50 100

SCALE: 1"=50' (HORZ.)
1"=5' (VERT.)

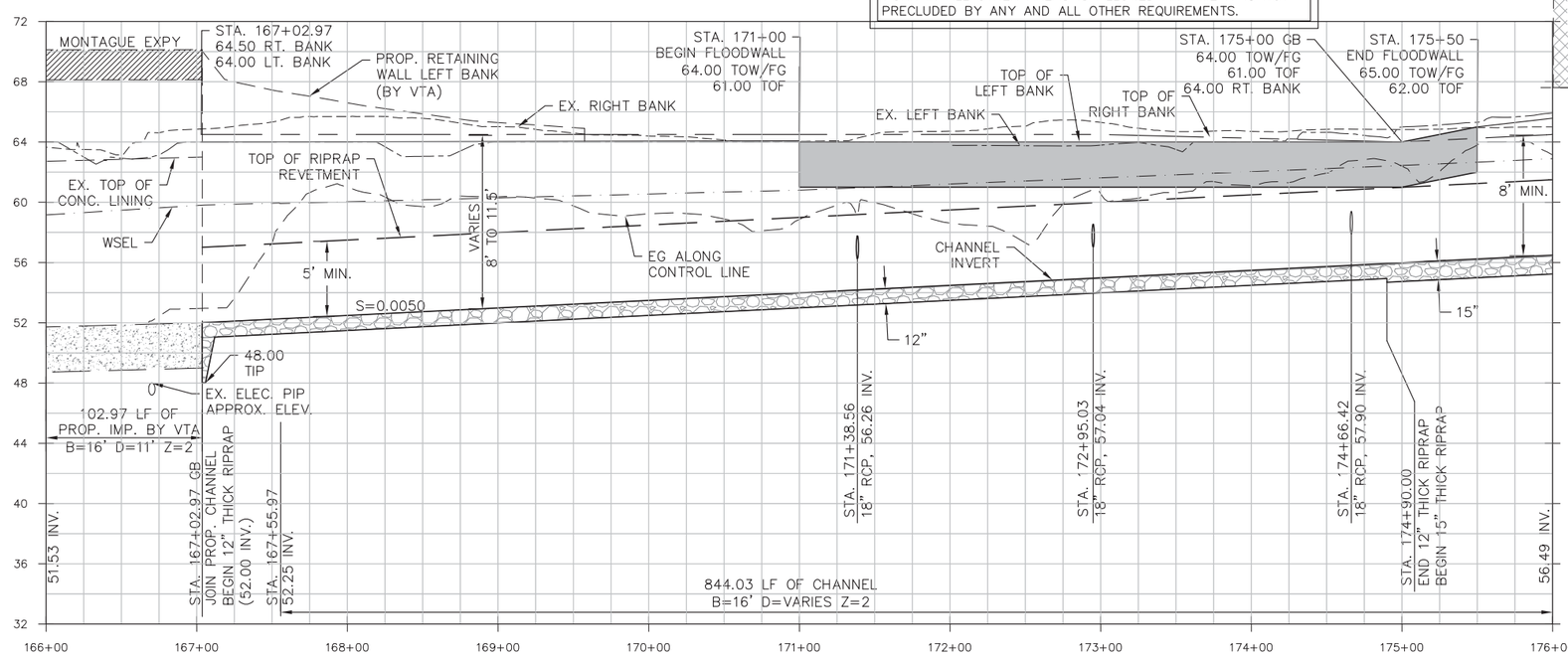

CONSTRUCTION NOTES

(1) REMOVE EXISTING FEATURES TO CONSTRUCT IMPROVEMENTS AS SHOWN

(3) CONSTRUCT EARTHEN CHANNEL WITH RIPRAP REVETMENT PER TYPICAL DETAILS AND CROSS SECTIONS AS SHOWN ON SHEETS C-200 AND C-201

(5) REMOVE EXISTING AND CONSTRUCT NEW STORM DRAIN OUTLET AS SHOWN ON SHEET C-301

(6) CONSTRUCT 6" AB ACCESS ROAD AS SHOWN ON THE PROFILE AND CROSS SECTIONS

(8) CONSTRUCT RIPRAP REVETMENT PER DETAIL ON SHEET C-302

(13) CONSTRUCT CONRETE FLOODWALL PER DETAILS ON SHEET S-105

(14) CONSTRUCT 6' HIGH CHAIN LINK FENCE PER DETAIL ON SHEET C-303

(23) CONSTRUCT GUTTER PER DETAIL ON SHEET C-108

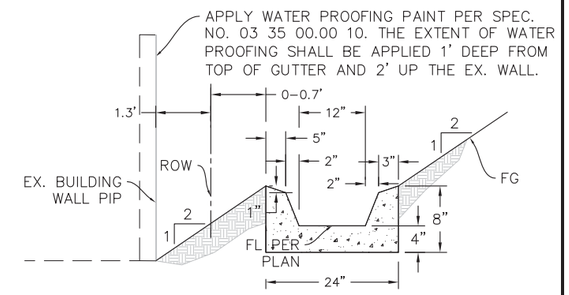

GUTTER DETAIL

N.T.S.

NOTE: CONTRACTOR TO SUBMIT EXCAVATION AND SHORING PLAN TO CONSTRUCT NEXT TO BUILDING.

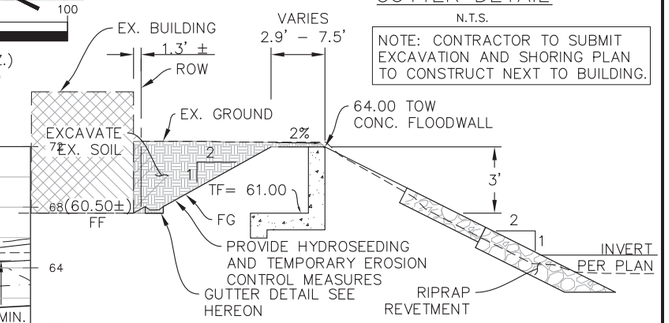

SECTION A-A

N.T.S.

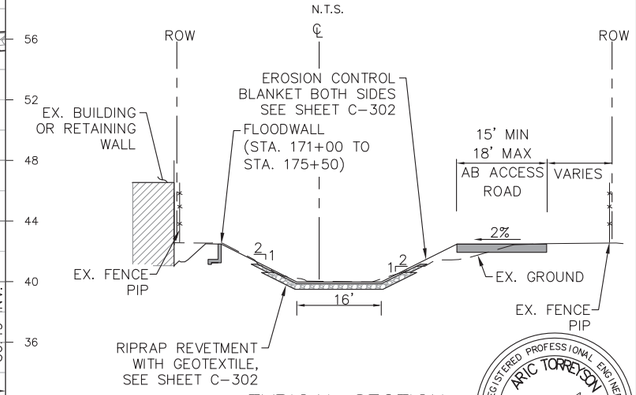

TYPICAL SECTION

N.T.S.

REGISTERED PROFESSIONAL ENGINEER ARIC TORREYSON NO. 66068 EXP. 6-30-18 CIVIL STATE OF CALIFORNIA

US Army Corps of Engineers
San Francisco District
1455 Market Street
San Francisco, CA 94103

TETRA TECH
17885 VON KARMAN AVE., SUITE 500
IRVINE, CA 92614
Phone: (949) 809-5000

Mark	Description	Date	Appr.
1	LEFT BANK ACCESS ROAD DELETED	7/6/16	

DESIGNED BY: AMT | DATE: 8-4-2016 | SHEET NO. 17 of 71 | DRAWING NO. | DRAWN BY: AWG | CHECKED BY: YHC

PREPARED UNDER THE DIRECTION OF JOHN C. MORROW LT. COLONEL, C.E., DISTRICT COMMANDER

SUBMITTED: Chief, Civil Design Section
APPROVAL RECOMMENDED:
Chief, Engineering Branch
APPROVED: Chief, Engineering & Technical Services

SANTA CLARA COUNTY, CALIFORNIA
UPPER BERRYESSA CREEK FLOOD RISK MANAGEMENT PROJECT
PLAN AND PROFILE
STA. 166+00.00 TO STA. 176+00.00

Sheet reference number C-108

P:\Wah\T31331 Berryessa Design SCVWD\11 Design\01 Final Design\Sheets\ PP - (9).dwg 02 Aug 2016 - 7:18pm

CONFORMED DRAWING

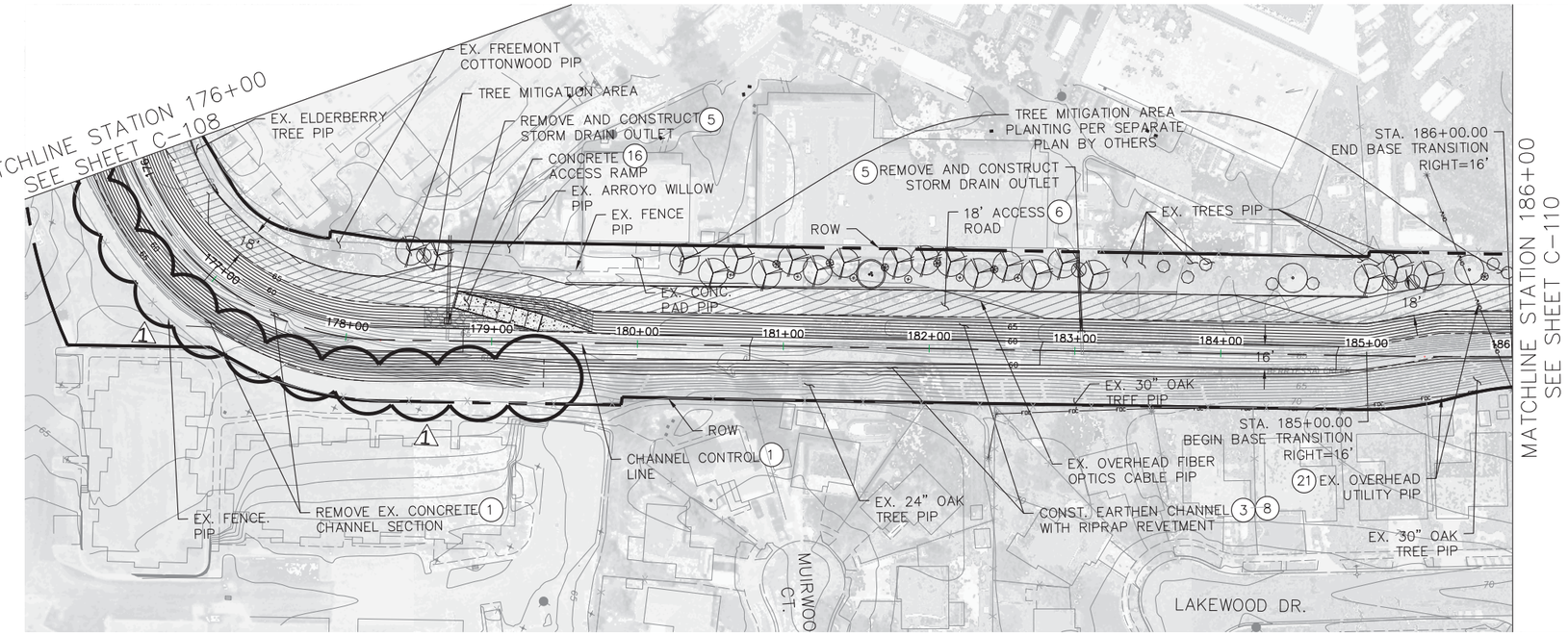

CONSTRUCTION NOTES

1. REMOVE EXISTING FEATURES TO CONSTRUCT IMPROVEMENTS AS SHOWN
3. CONSTRUCT EARTHEN CHANNEL WITH RIPRAP REVETMENT PER TYPICAL DETAILS AND CROSS SECTIONS AS SHOWN ON SHEETS C-200 AND C-201
5. REMOVE EXISTING AND CONSTRUCT NEW STORM DRAIN OUTLET AS SHOWN ON SHEET C-301
6. CONSTRUCT 6" AB ACCESS ROAD AS SHOWN ON THE PROFILE AND CROSS SECTIONS
8. CONSTRUCT RIPRAP REVETMENT PER DETAIL ON SHEET C-302
16. CONSTRUCTION CONCRETE ACCESS RAMP PER DETAILS ON SHEET C-304
21. CONTRACTOR TO USE EXTREME CAUTION WHILE WORKING UNDERNEATH OVERHEAD POWER LINES

IN-CHANNEL CONSTRUCTION WORK IS NOT ALLOWED FROM CONTRACT AWARD AND NTP UNTIL MARCH 1, 2017 OR THE END OF THE RAINY SEASON AS DETERMINED/DIRECTED BY THE CONTRACTING OFFICER FROM STATION 87+21.43 TO STATION 120+00 AND FROM STATION 159+50 TO STATION 179+00. THIS IS TO LIMIT THE POTENTIAL FOR DOWNSTREAM FLOODING. WORK IN ALL OTHER AREAS IS ALLOWED ANYTIME IT IS NOT PRECLUDED BY ANY AND ALL OTHER REQUIREMENTS.

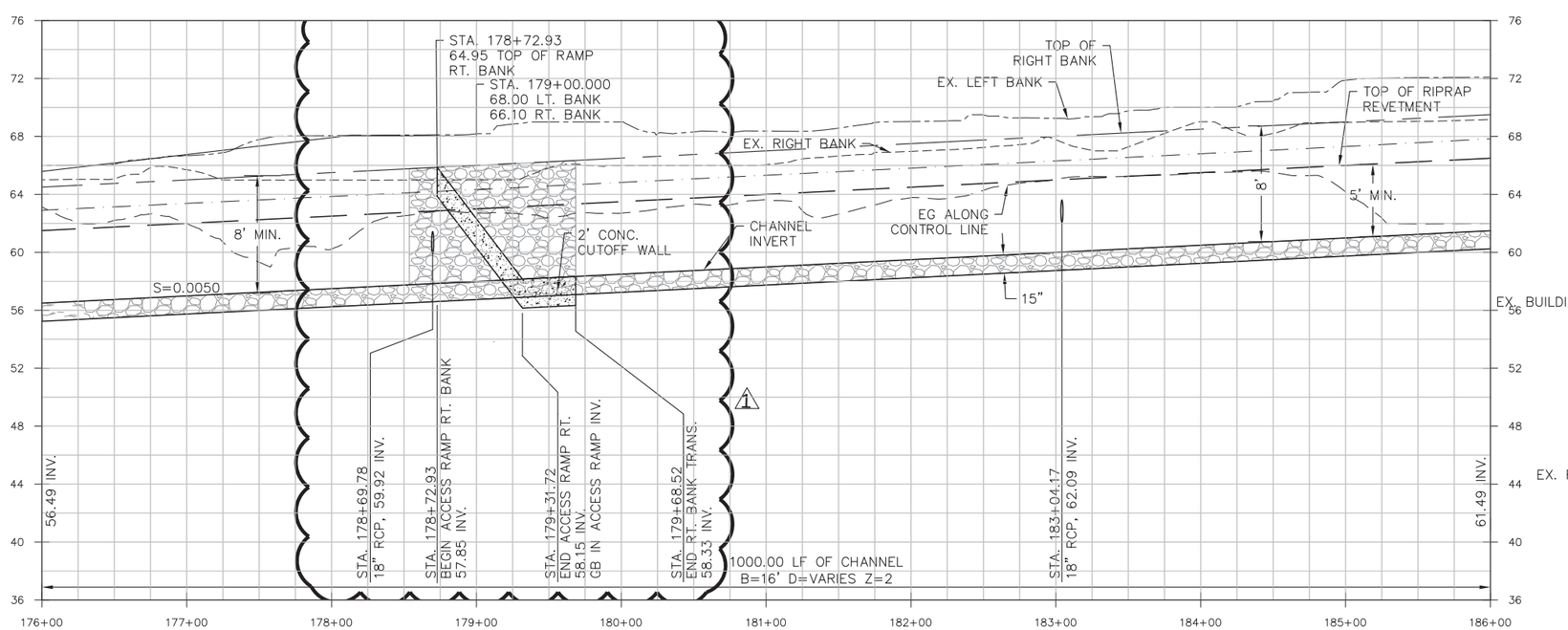

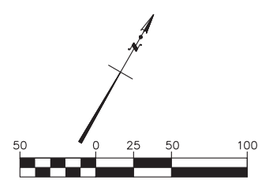

SCALE: 1"=50' (HORZ.)
1"=5' (VERT.)

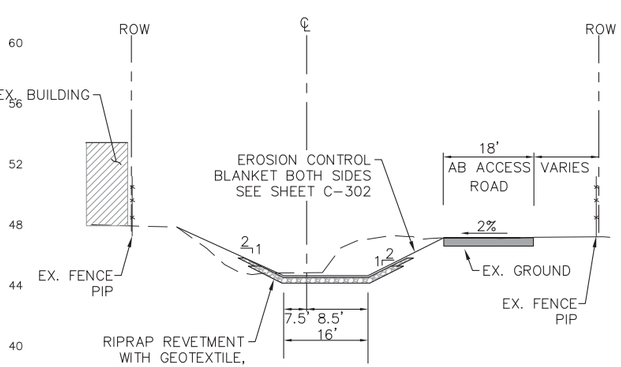

TYPICAL SECTION
N.T.S.

REGISTERED PROFESSIONAL ENGINEER
ARIC TORREYSON
NO. 66068
EXP. 6-30-18
CIVIL
STATE OF CALIFORNIA

US Army Corps of Engineers
San Francisco District
1455 Market Street
San Francisco, CA 94103

TETRA TECH
17885 VON KARMAN AVE., SUITE 500
IRVINE, CA 92614
Phone: (949) 809-5000

Mark	Description	Date	Appr.
1	LEFT ACCESS RAMP AND ACCESS ROAD DELETED	7/6/16	

SUBMITTED:
Chief, Civil Design Section
APPROVAL RECOMMENDED:
Chief, Engineering Branch
APPROVED:
Chief, Engineering & Technical Services

DESIGNED BY: AMT
CHECKED BY: YHC
DRAWN BY: AWG
DATE: 8-4-2016
SHEET NO. 18 of 71
DRAWING NO.

PREPARED UNDER THE DIRECTION OF
JOHN C. MORROW
LT. COLONEL, C.E., DISTRICT COMMANDER

SANTA CLARA COUNTY, CALIFORNIA
UPPER BERRYESSA CREEK FLOOD RISK MANAGEMENT PROJECT
PLAN AND PROFILE
STA. 176+00.00 TO STA. 186+00.00

Sheet reference number
C-109

P:\Wat\T31331 Berryessa Design SCVWD\11 Design\01 Final Design\Sheets\ PP - (10).dwg 02 Aug 2016 - 7:23pm

CONFORMED DRAWING

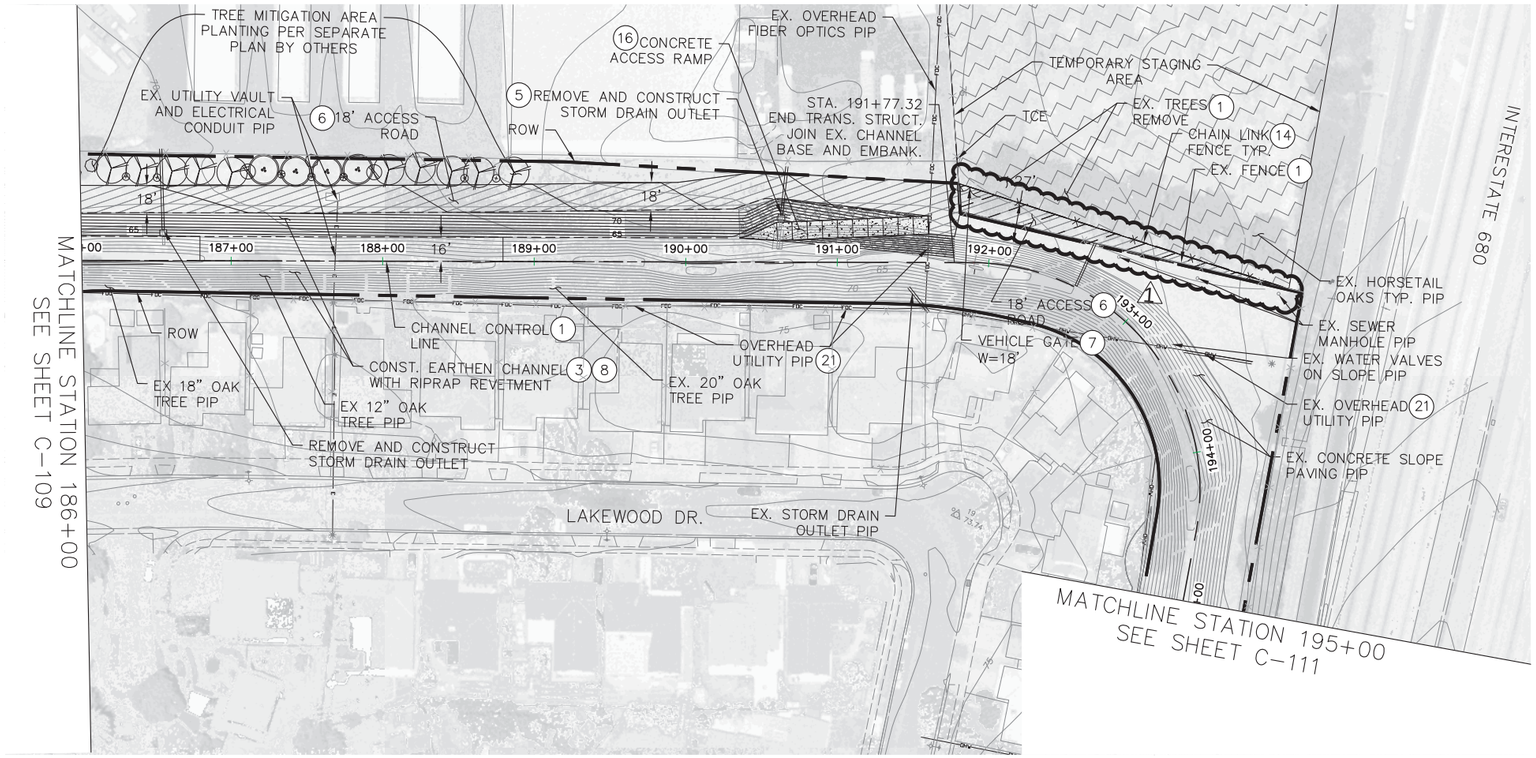

CONSTRUCTION NOTES

1. REMOVE EXISTING FEATURES TO CONSTRUCT IMPROVEMENTS AS SHOWN
3. CONSTRUCT EARTHEN CHANNEL WITH RIPRAP REVETMENT PER TYPICAL DETAILS AND CROSS SECTIONS AS SHOWN ON SHEETS C-200 AND C-201
5. REMOVE EXISTING AND CONSTRUCT NEW STORM DRAIN OUTLET AS SHOWN ON SHEET C-301
6. CONSTRUCT 6" AB ACCESS ROAD AS SHOWN ON THE PROFILE AND CROSS SECTIONS
7. REMOVE EXISTING AND CONSTRUCT NEW DOUBLE SWING GATE PER DETAIL ON SHEET C-303
8. CONSTRUCT RIPRAP REVETMENT PER DETAIL ON SHEET C-302
14. CONSTRUCT 6' HIGH CHAIN LINK FENCE PER DETAIL ON SHEET C-303
16. CONSTRUCTION CONCRETE ACCESS RAMP PER DETAILS ON SHEET C-304
21. CONTRACTOR TO USE EXTREME CAUTION WHILE WORKING UNDERNEATH OVERHEAD POWER LINES

IN-CHANNEL CONSTRUCTION WORK IS NOT ALLOWED FROM CONTRACT AWARD AND NTP UNTIL MARCH 1, 2017 OR THE END OF THE RAINY SEASON AS DETERMINED/DIRECTED BY THE CONTRACTING OFFICER FROM STATION 87+21.43 TO STATION 120+00 AND FROM STATION 159+50 TO STATION 179+00. THIS IS TO LIMIT THE POTENTIAL FOR DOWNSTREAM FLOODING. WORK IN ALL OTHER AREAS IS ALLOWED ANYTIME IT IS NOT PRECLUDED BY ANY AND ALL OTHER REQUIREMENTS.

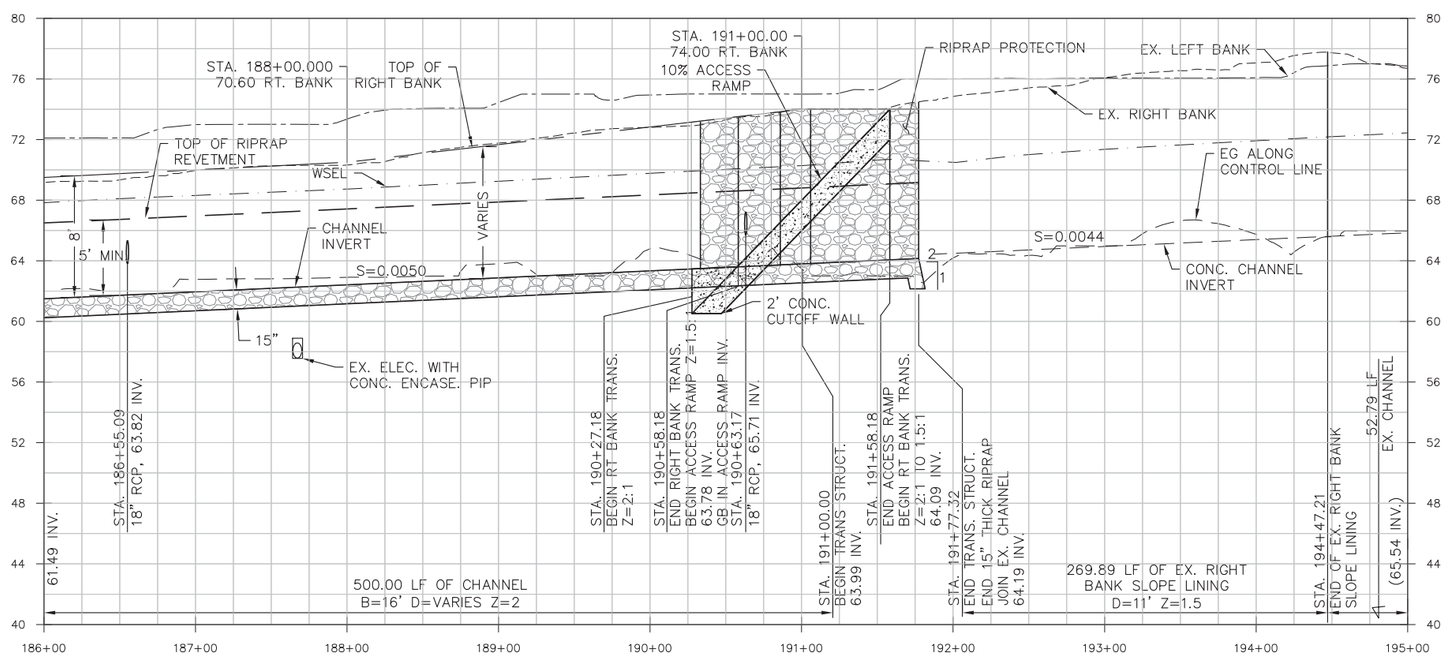

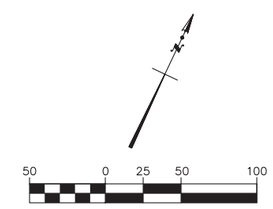

SCALE: 1"=50' (HORZ.)
1"=5' (VERT.)

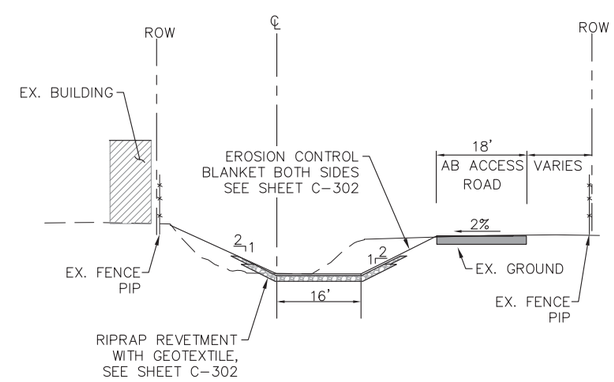

TYPICAL SECTION
N.T.S.

REGISTERED PROFESSIONAL ENGINEER ARIC TORREYSON NO. 66068 EXP. 6-30-18 CIVIL STATE OF CALIFORNIA

US Army Corps of Engineers
San Francisco District
1455 Market Street
San Francisco, CA 94103

TETRA TECH
1788S VON KARMAN AVE., SUITE 500
IRVINE, CA 92614
Phone: (949) 809-5000

Mark	Description	Date	Appr.
1	ADDITION OF ACCESS ROAD	7/6/16	

DESIGNED BY: AMT
DRAWN BY: AWG
CHECKED BY: YHC
DATE: 8-4-2016
SHEET NO. 19 of 71
DRAWING NO.

PREPARED UNDER THE DIRECTION OF JOHN C. MORROW LT. COLONEL, C.E., DISTRICT COMMANDER

SUBMITTED: Chief, Civil Design Section
APPROVAL RECOMMENDED:
Chief, Engineering Branch
APPROVED:
Chief, Engineering & Technical Services

SANTA CLARA COUNTY, CALIFORNIA
UPPER BERRYESSA CREEK FLOOD RISK MANAGEMENT PROJECT

PLAN AND PROFILE

STA. 186+00.00 TO STA. 195+00.00

Sheet reference number C-110

CONFORMED DRAWING

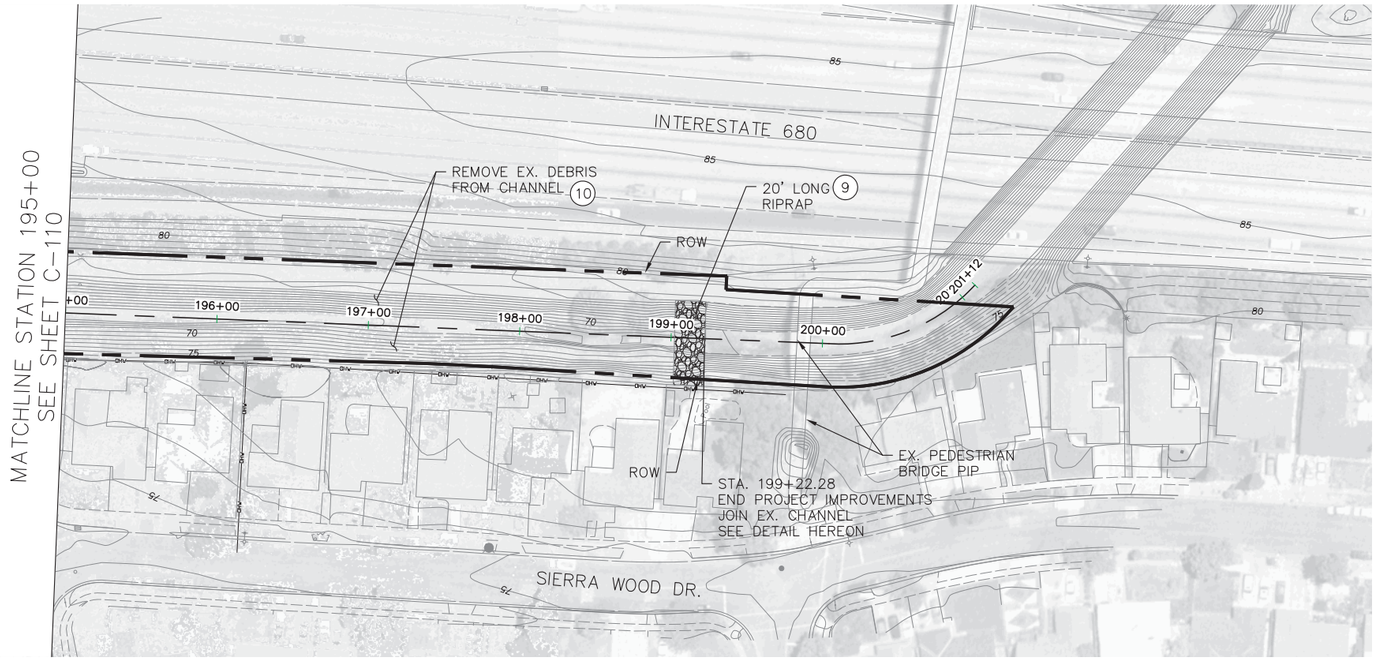

CONSTRUCTION NOTES

(6) CONSTRUCT 6" AB ACCESS ROAD AS SHOWN ON THE PROFILE AND CROSS SECTIONS

(9) CONSTRUCT 24" THICK RIPRAP REVETMENT PER DETAIL ON SHEET C-302

(10) REMOVE EX. SEDIMENT AND DEBRIS FROM CHANNEL INVERT

IN-CHANNEL CONSTRUCTION WORK IS NOT ALLOWED FROM CONTRACT AWARD AND NTP UNTIL MARCH 1, 2017 OR THE END OF THE RAINY SEASON AS DETERMINED/DIRECTED BY THE CONTRACTING OFFICER FROM STATION 87+21.43 TO STATION 120+00 AND FROM STATION 159+50 TO STATION 179+00. THIS IS TO LIMIT THE POTENTIAL FOR DOWNSTREAM FLOODING. WORK IN ALL OTHER AREAS IS ALLOWED ANYTIME IT IS NOT PRECLUDED BY ANY AND ALL OTHER REQUIREMENTS.

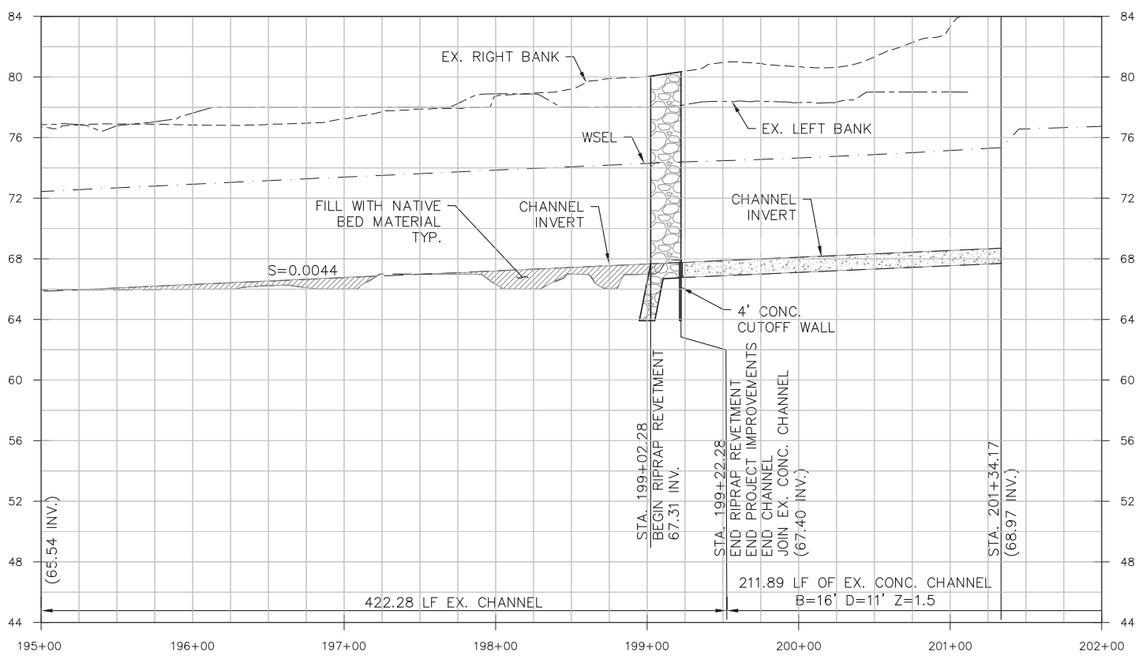

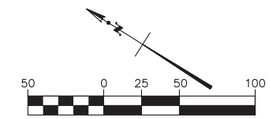

SCALE: 1"=50' (HORZ.)
1"=5' (VERT.)

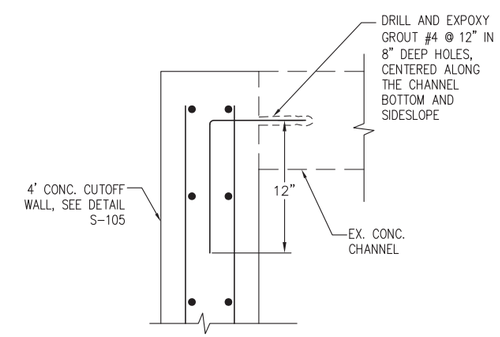

CONNECTION TO EX. CHANNEL DETAIL– STA. 199+22.28

N.T.S.

REGISTERED PROFESSIONAL ENGINEER
ARIC TORREYSON
NO. 66068
EXP. 6-30-18
CIVIL
STATE OF CALIFORNIA

US Army Corps of Engineers
San Francisco District
1455 Market Street
San Francisco, CA 94103

TETRA TECH
17885 VON KARMAN AVE., SUITE 500
IRVINE, CA 92614
Phone: (949) 809-5000

Mark	Description	Date	Appr.
1	LEFT BANK ACCESS ROAD IMPROVEMENTS DELETED	7/6/16	

DESIGNED BY: AMT
CHECKED BY: YHC
DRAWN BY: AWG
DATE: 8-4-2016
SHEET NO. 20 of 71
DRAWING NO.

SUBMITTED:
Chief, Civil Design Section
APPROVAL RECOMMENDED:
Chief, Engineering Branch
APPROVED:
Chief, Engineering & Technical Services

PREPARED UNDER THE DIRECTION OF
JOHN C. MORROW
LT. COLONEL, C.E., DISTRICT COMMANDER

SANTA CLARA COUNTY, CALIFORNIA
UPPER BERRYESSA CREEK FLOOD RISK MANAGEMENT PROJECT

PLAN AND PROFILE

STA. 195+00.00 TO STA. 201+34.17

Sheet reference number
C-111

P:\Wat\T31331 Berryessa Design SCVWD\11 Design\01 Final Design\Sheets\ PP - (12).dwg 02 Aug 2016 - 7:34pm

CONFORMED DRAWING

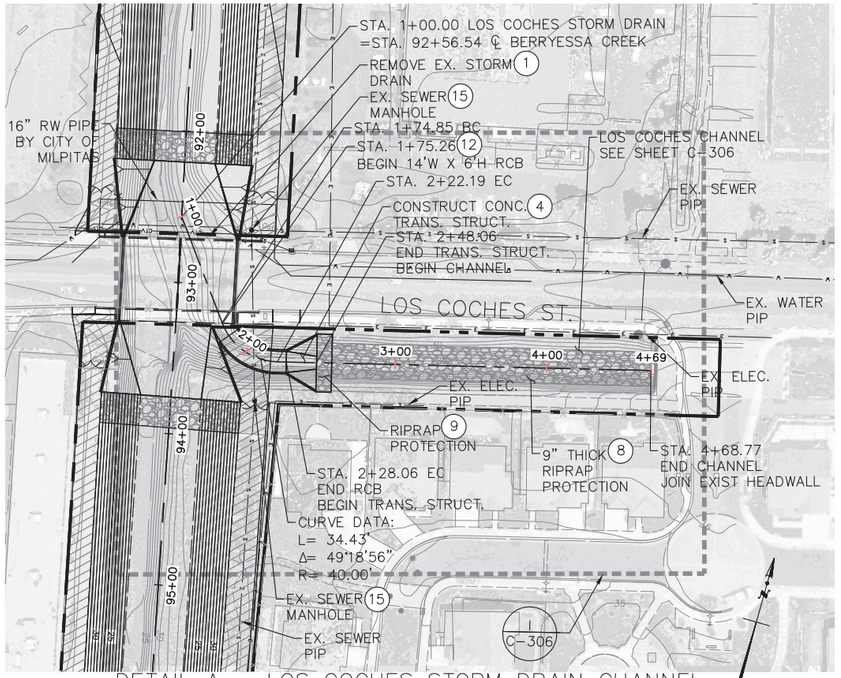

DETAIL A – LOS COCHES STORM DRAIN CHANNEL

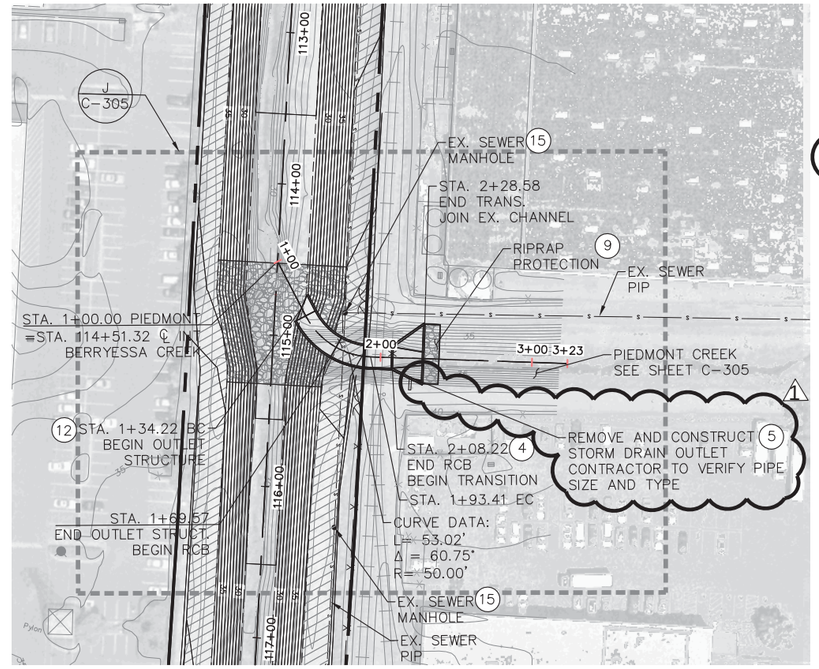

DETAIL B – PIEDMONT CREEK

CONSTRUCTION NOTES

1. REMOVE EXISTING FEATURES TO CONSTRUCT IMPROVEMENTS AS SHOWN
4. CONSTRUCT CONCRETE TRANSITION STRUCTURE PER DETAILS AS SHOWN ON SHEETS S-103
5. REMOVE EXISTING AND CONSTRUCT NEW STORM DRAIN OUTLET AS SHOWN ON SHEET C-301
8. CONSTRUCT RIPRAP REVETMENT PER DETAIL ON SHEET C-302
9. CONSTRUCT 24" THICK RIPRAP REVETMENT PER DETAIL ON SHEET C-302
12. CONSTRUCT 14'W X 6'H RCB PER DETAILS ON SHEET S-102
15. ADJUST EX. SEWER MANHOLE TO FINISH GRADE AS NECESSARY PER DETAIL ON SHEET C-304

SCALE: 1"=50' (HORZ.)
1"=5' (VERT.)

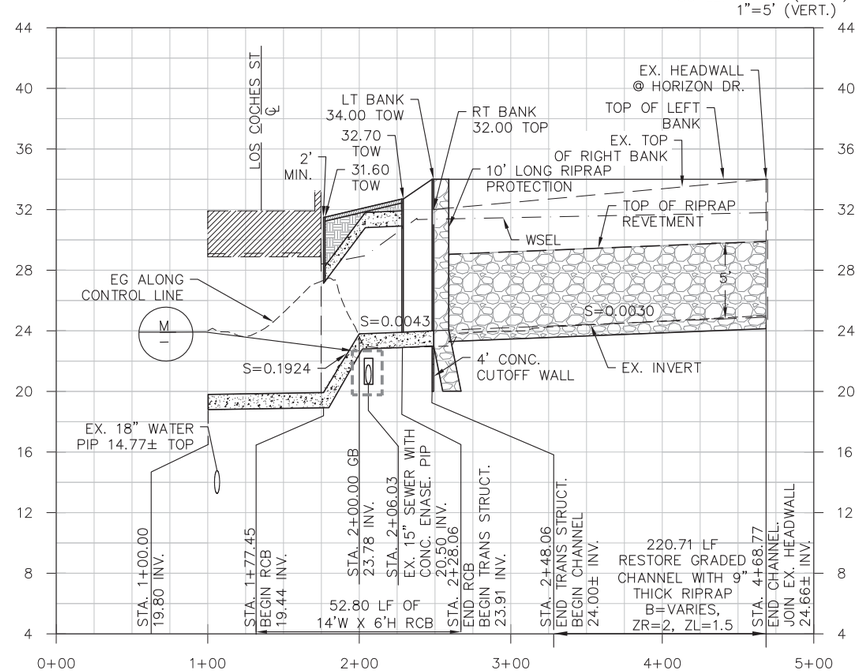

LOS COCHES STORM DRAIN CHANNEL

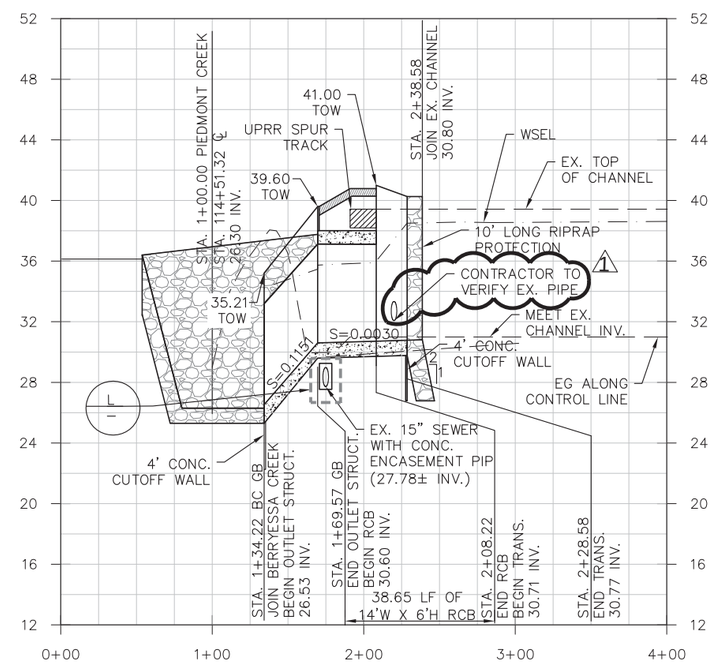

PIEDMONT CREEK

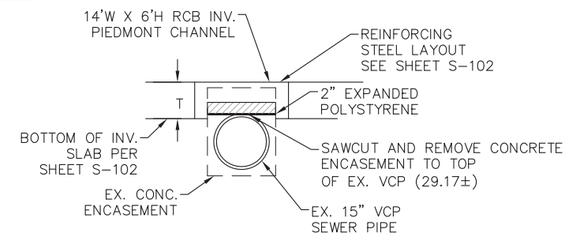

SEWER CROSSING DETAIL (L)
N.T.S

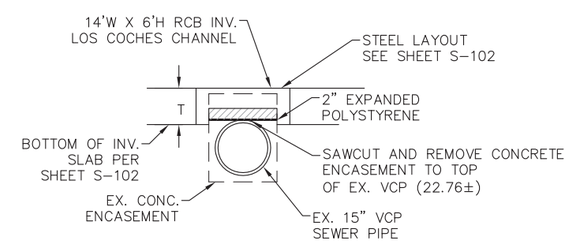

SEWER CROSSING DETAIL (M)
N.T.S

REGISTERED PROFESSIONAL ENGINEER
ARIC TORRESON
NO. 66068
EXP. 6-30-18
CIVIL
STATE OF CALIFORNIA

US Army Corps of Engineers
San Francisco District
1455 Market Street
San Francisco, CA 94103

TETRA TECH
1788S VON KARMAN AVE.,
SUITE 500
IRVINE, CA 92614
Phone: (949) 809-5000

Mark	Description	Date	Appr.
1	ADD STORM DRAIN OUTLET STRUCTURE	7/6/16	

DESIGNED BY: AMT
CHECKED BY: YHC
DRAWN BY: AWG
DATE: 8-4-2016
SHEET NO. 21 of 71
DRAWING NO.

PREPARED UNDER THE DIRECTION OF
JOHN C. MORROW
LT. COLONEL, C.E., DISTRICT COMMANDER

SUBMITTED:
Chief, Civil Design Section
APPROVAL RECOMMENDED:
Chief, Engineering Branch
APPROVED:
Chief, Engineering & Technical Services

SANTA CLARA COUNTY, CALIFORNIA
UPPER BERRYESSA CREEK FLOOD RISK MANAGEMENT PROJECT
PLAN AND PROFILE
PIEDMONT AND LOS COCHES CHANNELS

Sheet reference number
C-112

P:\Watt\T31331 Berryessa Design SCVWD\L1 Design\01 Final Design\Sheets\ PP - (13).dwg 02 Aug 2016 - 7:39pm

CONFORMED DRAWING

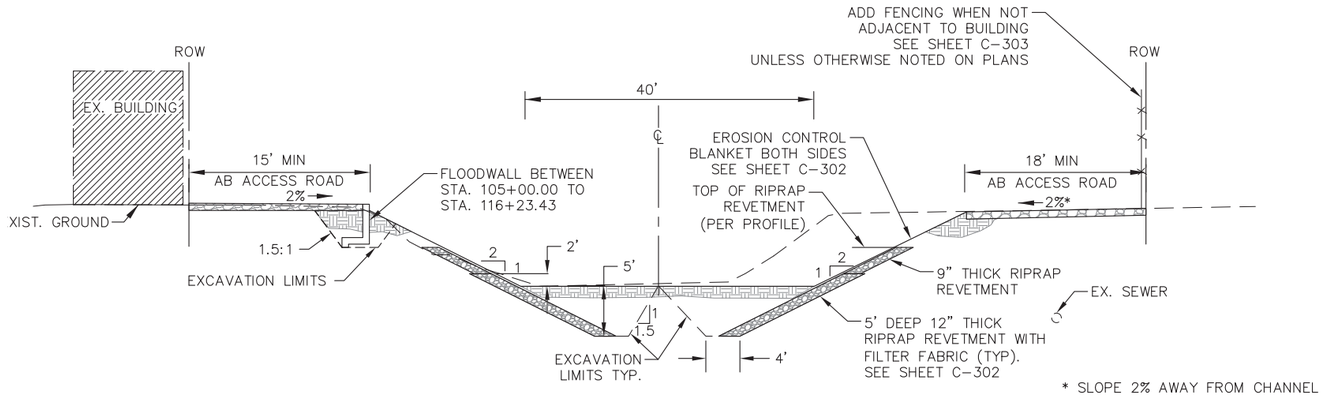

* SLOPE 2% AWAY FROM CHANNEL (STA. 87+21.43 TO STA. 92+20.88)

TYPICAL CHANNEL DETAIL
STA. 87+21.43 TO STA. 114+72.43
N.T.S.

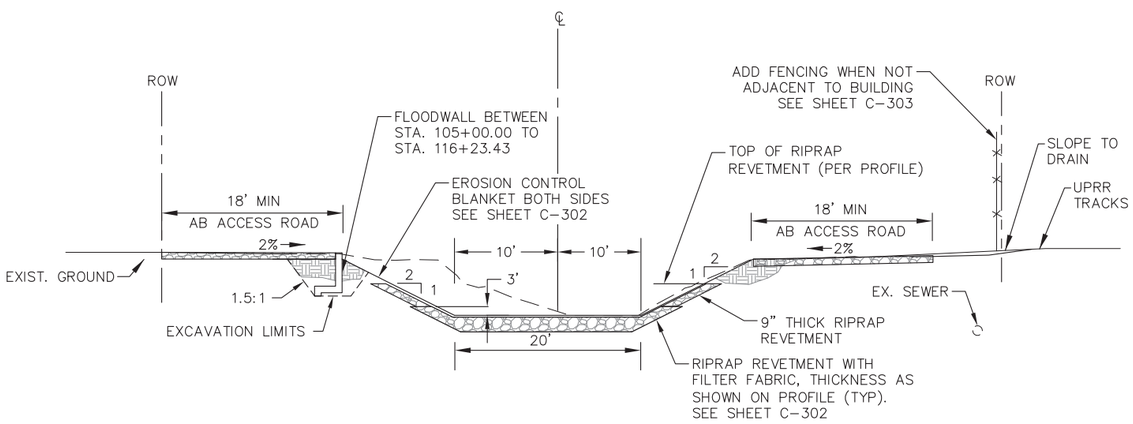

TYPICAL CHANNEL DETAIL
STA. 115+43.43 TO STA. 123+40.30
N.T.S.

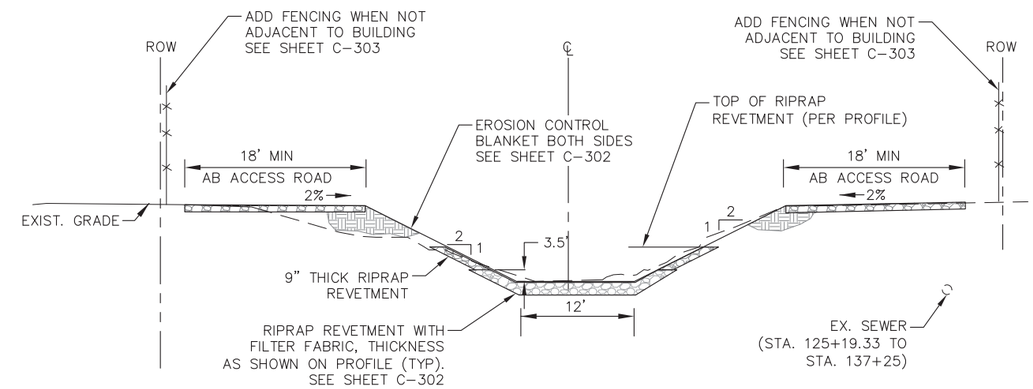

TYPICAL CHANNEL DETAIL
STA. 125+19.33 TO STA. 149+50.00
N.T.S.

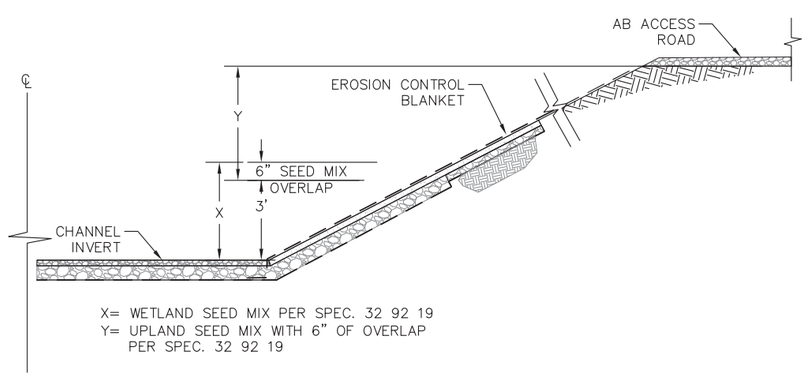

X= WETLAND SEED MIX PER SPEC. 32 92 19
Y= UPLAND SEED MIX WITH 6" OF OVERLAP PER SPEC. 32 92 19

HYDROSEEDING DETAIL
STA. 87+41.43 TO STA. 191+00.00
N.T.S.

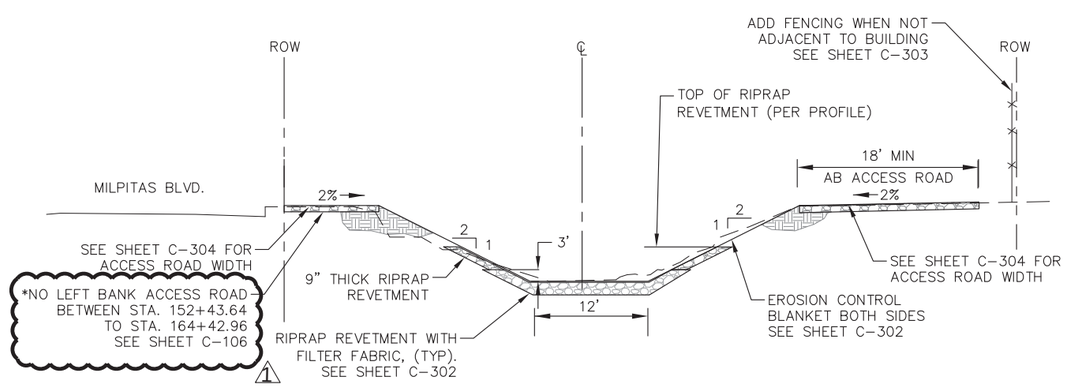

TYPICAL CHANNEL DETAIL
STA. 149+50.00 TO STA. 164+42.96
N.T.S.

TYPICAL SECTION NOTES

1. ALL CROSS SECTIONS ARE LOOKING DOWNSTREAM LEFT TO RIGHT.
2. HYDROSEED ALL EXPOSED CHANNEL SIDE SLOPES UNLESS OTHERWISE NOTED.

REGISTERED PROFESSIONAL ENGINEER ARIC TORREYSON NO. 66068 EXP. 6-30-18 CIVIL STATE OF CALIFORNIA

US Army Corps of Engineers
San Francisco District
1455 Market Street
San Francisco, CA 94103

TETRA TECH
17885 VON KARMAN AVE., SUITE 500
IRVINE, CA 92614
Phone: (949) 809-5000

Mark	Description	Date	Appr.
1	LEFT BANK ACCESS ROAD DELETED	7/6/16	

DESIGNED BY: AMT
DATE: 8-4-2016
SHEET NO. 22 of 71
CHECKED BY: YHC
DRAWN BY: AWG
DRAWING NO.

PREPARED UNDER THE DIRECTION OF
JOHN C. MORROW
LT. COLONEL, C.E., DISTRICT COMMANDER

SUBMITTED: Chief, Civil Design Section
APPROVAL RECOMMENDED: Chief, Engineering Branch
APPROVED: Chief, Engineering & Technical Services

SANTA CLARA COUNTY, CALIFORNIA
UPPER BERRYESSA CREEK FLOOD RISK MANAGEMENT PROJECT
TYPICAL CROSS SECTIONS & DETAILS (1)

Sheet reference number
C-200

CONFORMED DRAWING

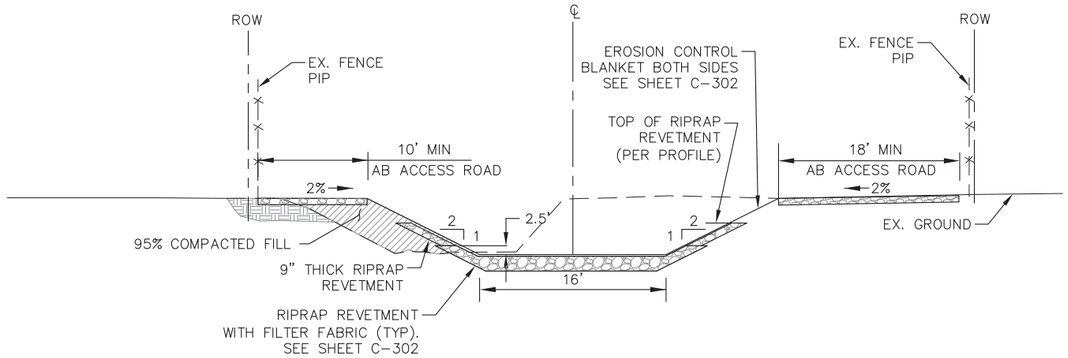

TYPICAL CHANNEL DETAIL
STA. 167+55.97 TO STA. 170+00.00
N.T.S.

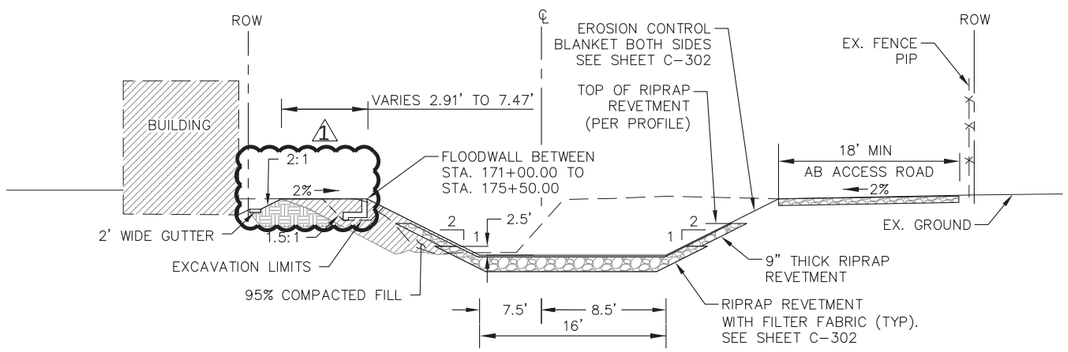

TYPICAL CHANNEL DETAIL
STA. 171+00.00 TO STA. 178+00.00
N.T.S.

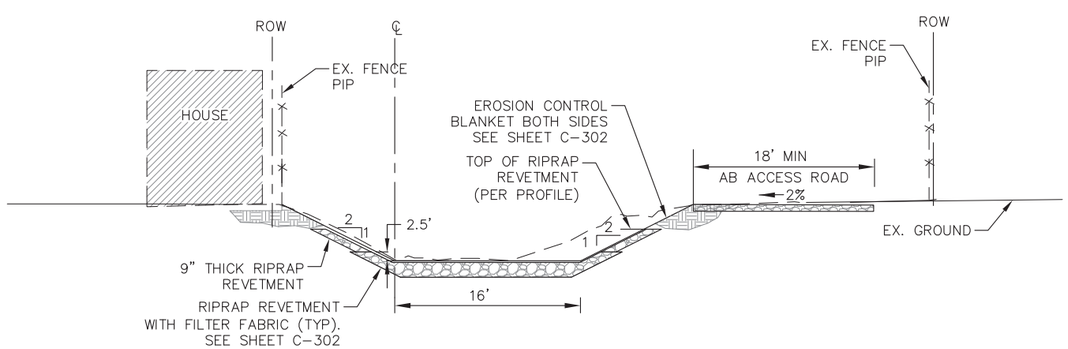

TYPICAL CHANNEL DETAIL
STA. 180+00.00 TO STA. 190+27.18
N.T.S.

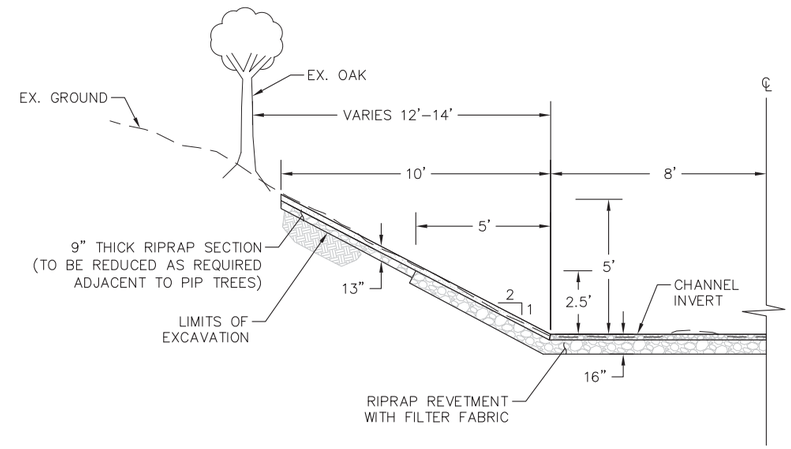

TREES ALONG LEFT BANK
STA. 179+00.00 TO STA. 191+00.00
N.T.S.

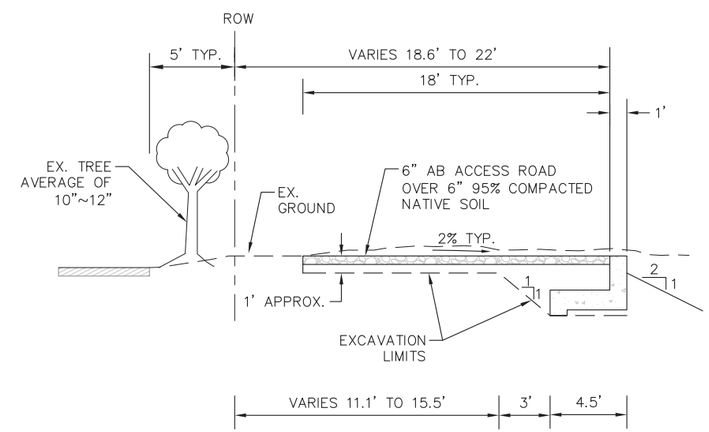

TREES ALONG ACCESS ROAD
N.T.S.

TYPICAL SECTION NOTES

1. ALL CROSS SECTIONS ARE LOOKING DOWNSTREAM LEFT TO RIGHT.
2. HYDROSEED ALL EXPOSED CHANNEL SIDE SLOPES WITH NATIVE GRASS SEED MIX.

REGISTERED PROFESSIONAL ENGINEER
ARIC TORREYSON
NO. 66068
EXP. 6-30-18
CIVIL
STATE OF CALIFORNIA

US Army Corps of Engineers
San Francisco District
1455 Market Street
San Francisco, CA 94103

TETRA TECH
17885 VON KARMAN AVE., SUITE 500
IRVINE, CA 92614
Phone: (949) 809-5000

Mark	Description	Date	Appr.
1	LEFT BANK ACCESS ROAD DELETED	7/6/16	

DESIGNED BY: AMT
DATE: 8-4-2016
CHECKED BY: YHC
SHEET NO. 23 of 71
DRAWN BY: AWG
DRAWING NO.

SUBMITTED: Chief, Civil Design Section
APPROVAL RECOMMENDED: Chief, Engineering Branch
APPROVED: Chief, Engineering & Technical Services

PREPARED UNDER THE DIRECTION OF
JOHN C. MORROW
LT. COLONEL, C.E., DISTRICT COMMANDER

SANTA CLARA COUNTY, CALIFORNIA
UPPER BERRYESSA CREEK FLOOD RISK MANAGEMENT PROJECT

TYPICAL CROSS SECTIONS & DETAILS (2)

Sheet reference number
C-201

CONFORMED DRAWING

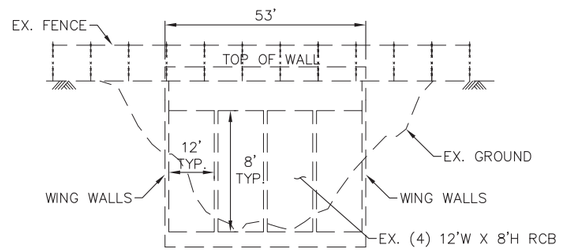

EX. EAST CALAVERAS BOULEVARD
TYPICAL SECTION AT STA. 87+00.00
HORIZ: 1"=20'
VERT: 1"=4'

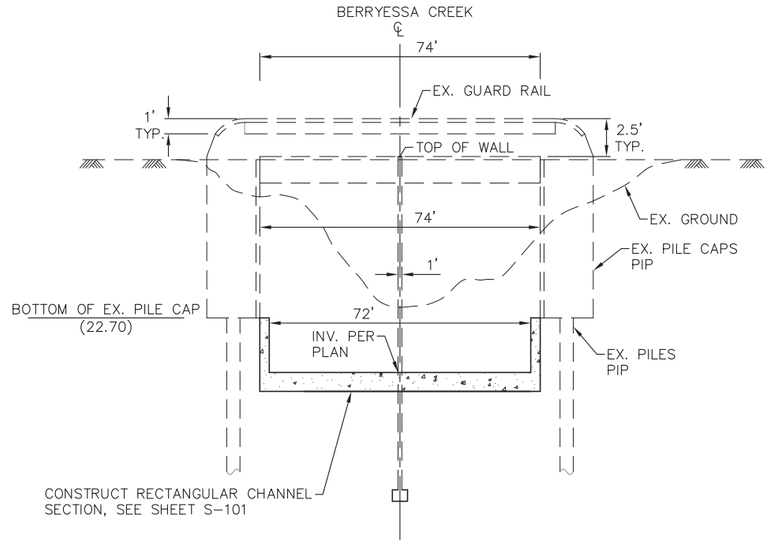

LOS COCHES STREET
TYPICAL SECTION AT. STA. 93+00.00
HORIZ: 1"=20'
VERT: 1"=4'

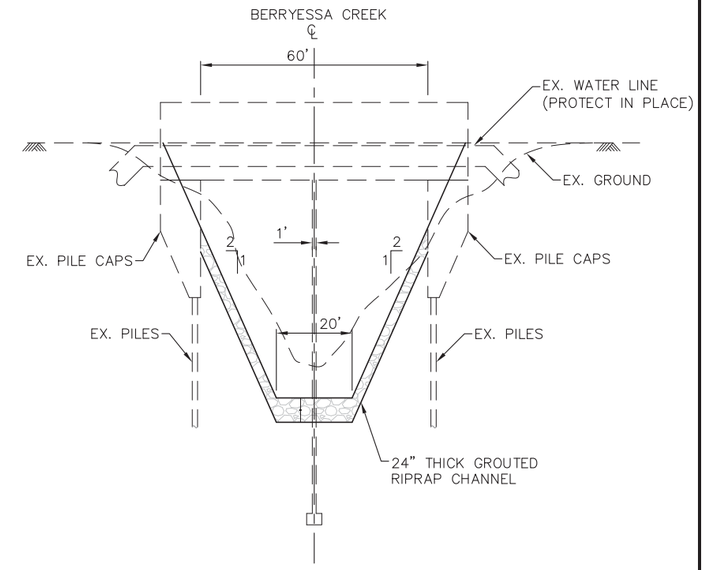

YOSEMITE DRIVE
TYPICAL SECTION AT STA. 124+25.00
HORIZ: 1"=20'
VERT: 1"=4'

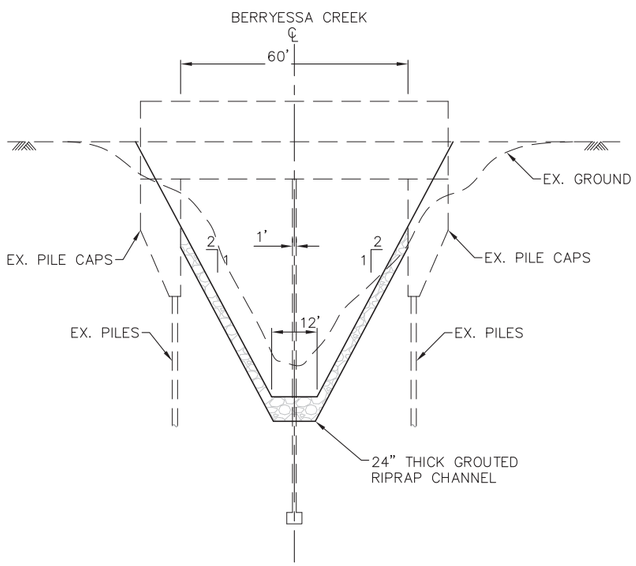

AMES AVENUE
TYPICAL SECTION AT. STA. 137+25.00
HORIZ: 1"=20'
VERT: 1"=4'

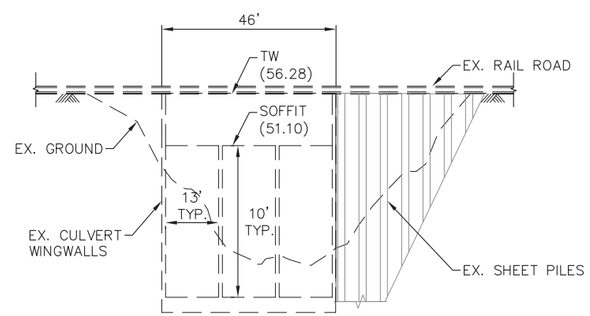

EX. UNION PACIFIC RAILROAD CROSSING
TYPICAL SECTION – STA. 142+00.00
HORIZ: 1"=20'
VERT: 1"=4'

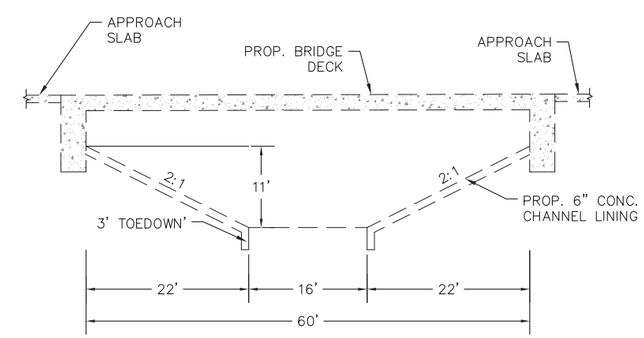

PROP. MONTAGUE EXPRESSWAY (BY VTA)
TYPICAL SECTION – STA. 166+00.00
NTS

BRIDGE NOTES

WORK UNDERNEATH EXISTING AND PROPOSED BRIDGES ENTAIL LOW HEAD CLEARANCES AND CONTRACTOR SHALL PLAN ACCORDINGLY.

REGISTERED PROFESSIONAL ENGINEER
ARIC TORREYSON
NO. 66068
EXP. 6-30-18
CIVIL
STATE OF CALIFORNIA

US Army Corps of Engineers
San Francisco District
1455 Market Street
San Francisco, CA 94103

TETRA TECH
17885 VON KARMAN AVE., SUITE 500
IRVINE, CA 92614
Phone: (949) 809-5000

Mark	Description	Date	Appr.

SUBMITTED:
Chief, Civil Design Section
APPROVAL RECOMMENDED:
Chief, Engineering Branch
APPROVED:
Chief, Engineering & Technical Services

DESIGNED BY: AMT
DATE: 8-4-2016
CHECKED BY: YHC
SHEET NO. 24 of 71
DRAWN BY: AWG
DRAWING NO.

PREPARED UNDER THE DIRECTION OF
JOHN C. MORROW
LT. COLONEL, C.E., DISTRICT COMMANDER

SANTA CLARA COUNTY, CALIFORNIA
UPPER BERRYESSA CREEK FLOOD RISK MANAGEMENT PROJECT
DETAILS – CHANNEL CROSSINGS

Sheet reference number
C-202

CONFORMED DRAWING

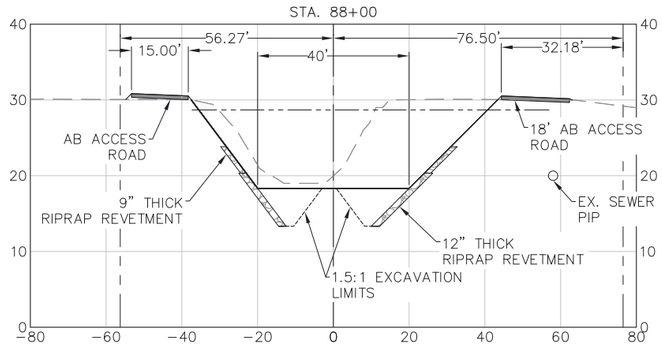

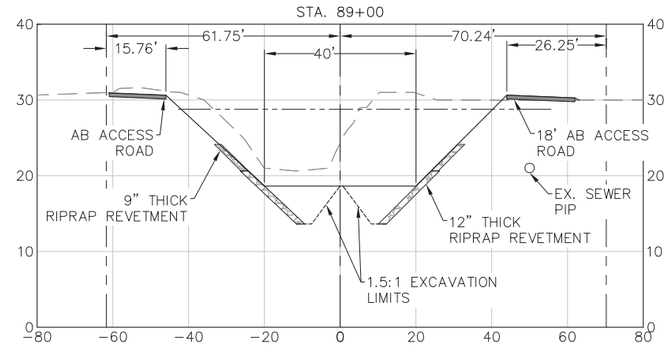

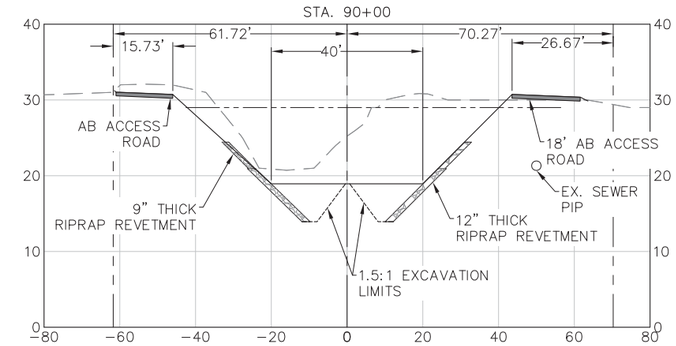

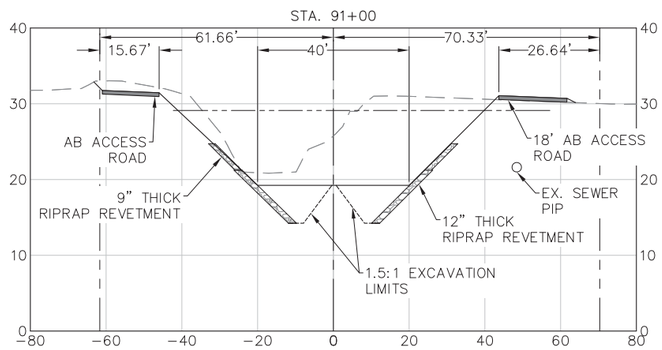

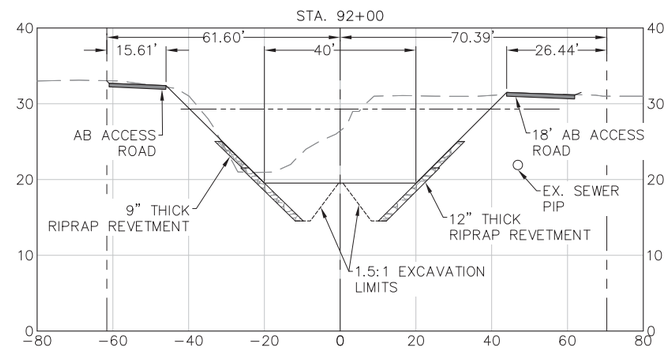

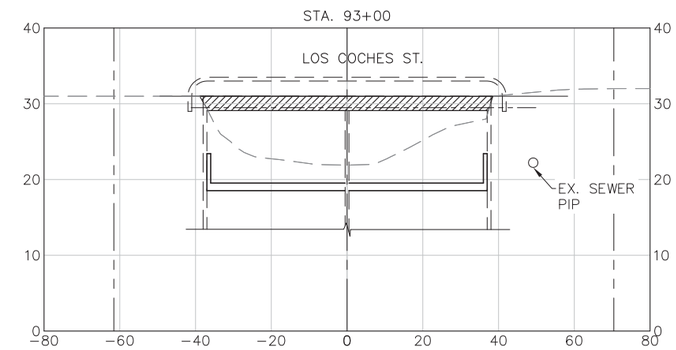

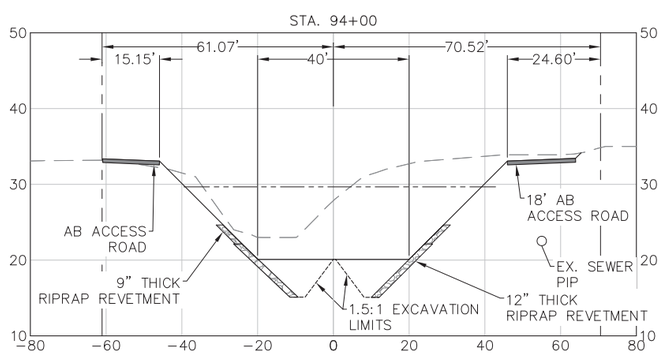

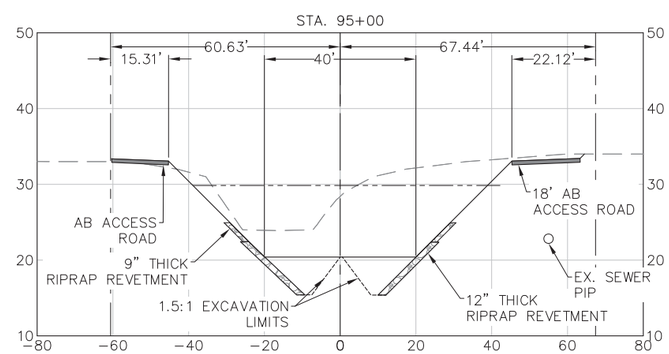

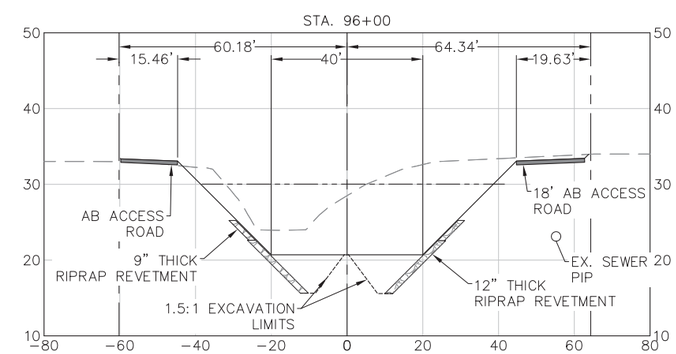

LEGEND

- 100-YR WSEL
- FINISH GRADE
- EXISTING GRADE
- RIGHT OF WAY

20 0 10 20 40

1"=20' H
1"=10' V

NOTE:
CROSS SECTIONS ARE TAKEN LOOKING DOWNSTREAM.

REGISTERED PROFESSIONAL ENGINEER
ARIC TORREYSON
NO. 66068
EXP. 6-30-18
CIVIL
STATE OF CALIFORNIA

US Army Corps of Engineers
San Francisco District
1455 Market Street
San Francisco, CA 94103

TETRA TECH
1788S VON KARMAN AVE.,
SUITE 500
IRVINE, CA 92614
Phone: (949) 809-5000

Mark	Description	Date	Appr.

DESIGNED BY: AMT
DATE: 8-4-2016
CHECKED BY: YHC
SHEET NO. 25 of 71
DRAWN BY: AWG
DRAWING NO.

SUBMITTED:
Chief, Civil Design Section
APPROVAL RECOMMENDED:
Chief, Engineering Branch
APPROVED:
Chief, Engineering & Technical Services

PREPARED UNDER THE DIRECTION OF
JOHN C. MORROW
LT. COLONEL, C.E., DISTRICT COMMANDER

SANTA CLARA COUNTY, CALIFORNIA
UPPER BERRYESSA CREEK FLOOD RISK MANAGEMENT PROJECT

CROSS SECTIONS

STA. 88+00.00 TO STA. 96+00.00

Sheet reference number
C-203

P:\Watt\T31331 Berryessa Design SCVWD\11 Design\01 Final Design\Sheets\ XS- C-203.dwg 02 Aug 2016 - 7:44pm

CONFORMED DRAWING

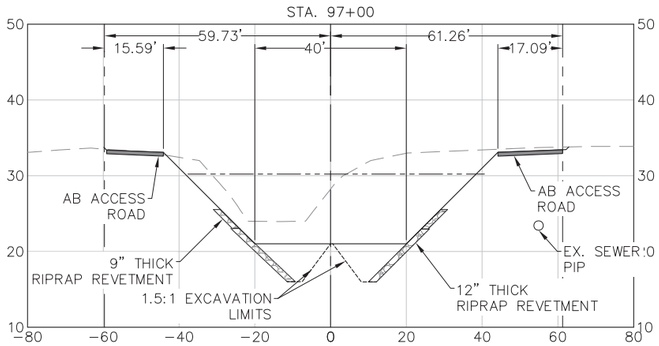

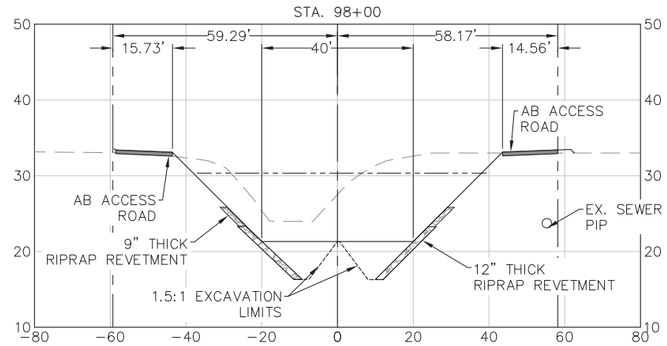

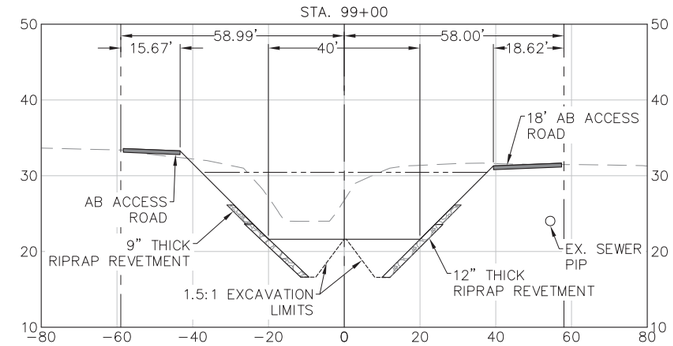

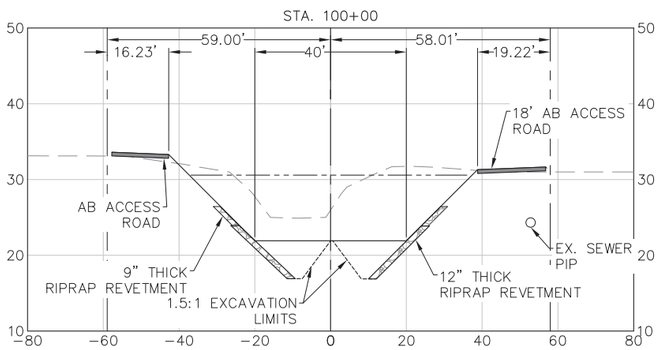

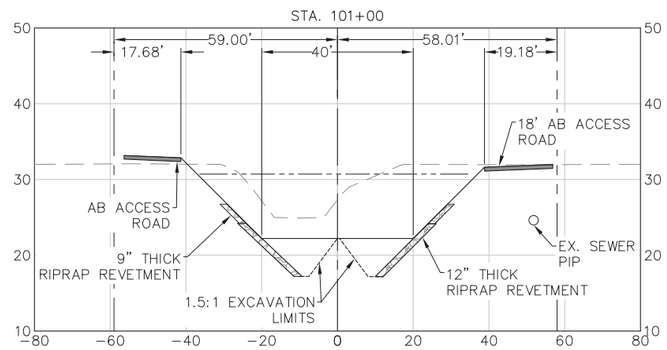

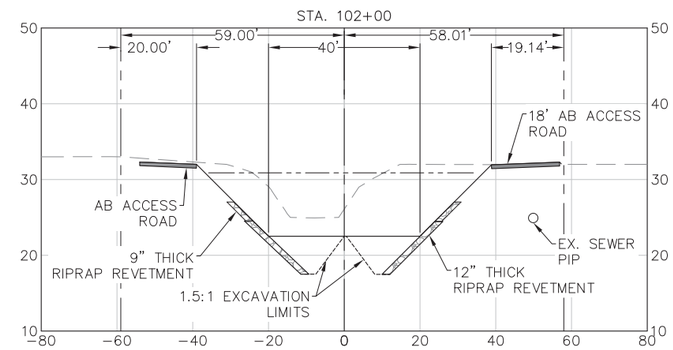

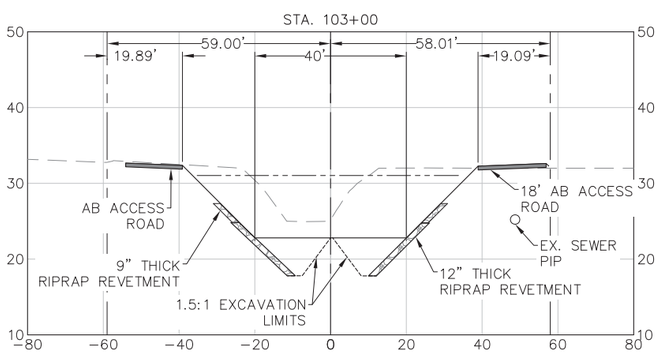

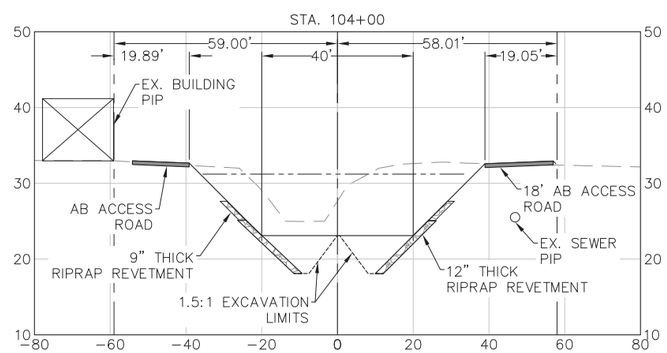

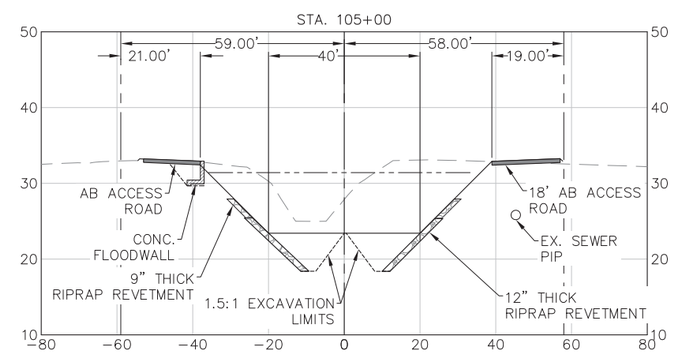

LEGEND

- 100-YR WSEL
- FINISH GRADE
- EXISTING GRADE
- RIGHT OF WAY

20 0 10 20 40

1"=20' H
1"=10' V

NOTE:
CROSS SECTIONS ARE TAKEN LOOKING DOWNSTREAM.

REGISTERED PROFESSIONAL ENGINEER
ARIC TORREYSON
NO. 66068
EXP. 6-30-18
CIVIL
STATE OF CALIFORNIA

US Army Corps of Engineers
San Francisco District
1455 Market Street
San Francisco, CA 94103

TETRA TECH
17885 VON KARMAN AVE., SUITE 500
IRVINE, CA 92614
Phone: (949) 809-5000

Mark	Description	Date	Appr.

DESIGNED BY: AMT
DATE: 8-4-2016
CHECKED BY: YHC
SHEET NO. 26 of 71
DRAWN BY: AWG
DRAWING NO.

PREPARED UNDER THE DIRECTION OF
JOHN C. MORROW
LT. COLONEL, C.E., DISTRICT COMMANDER

SUBMITTED:
Chief, Civil Design Section
APPROVAL RECOMMENDED:
Chief, Engineering Branch
APPROVED:
Chief, Engineering & Technical Services

SANTA CLARA COUNTY, CALIFORNIA
UPPER BERRYESSA CREEK FLOOD RISK MANAGEMENT PROJECT

CROSS SECTIONS

STA. 97+00.00 TO STA. 105+00.00

Sheet reference number
C-204

P:\Watt\T31331 Berryessa Design SCVWD\11 Design\01 Final Design\Sheets\ XS- C-204.dwg 02 Aug 2016 - 7:46pm

CONFORMED DRAWING

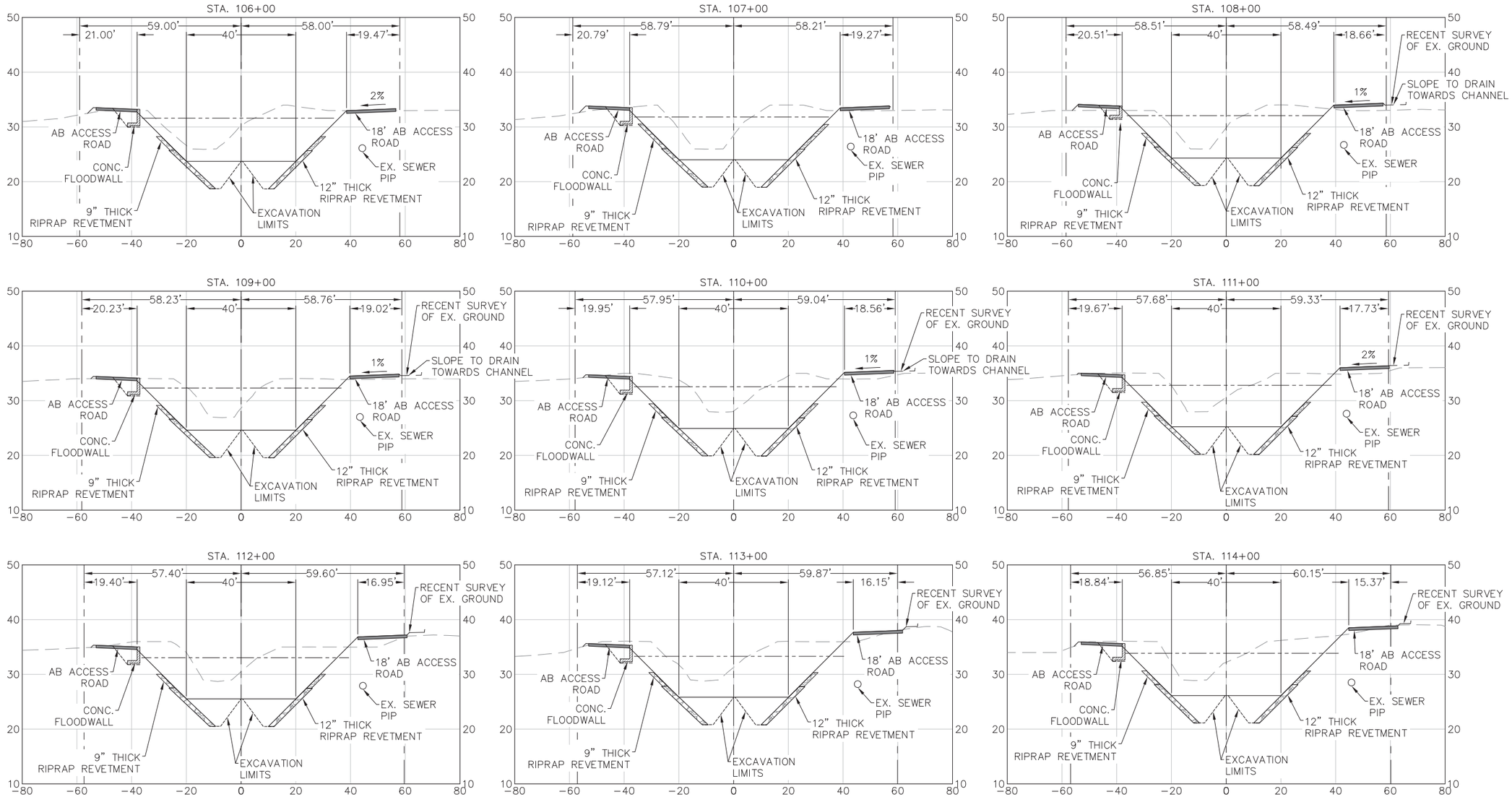

LEGEND

- 100-YR WSEL
- FINISH GRADE
- EXISTING GRADE
- RIGHT OF WAY

20 0 10 20 40

1"=20' H
1"=10' V

NOTE:
CROSS SECTIONS ARE TAKEN LOOKING DOWNSTREAM.

REGISTERED PROFESSIONAL ENGINEER
ARIC TORREYSON
NO. 66068
EXP. 6-30-18
CIVIL
STATE OF CALIFORNIA

US Army Corps of Engineers
San Francisco District
1455 Market Street
San Francisco, CA 94103

TETRA TECH
17885 VON KARMAN AVE., SUITE 500
IRVINE, CA 92614
Phone: (949) 809-5000

Mark	Description	Date	Appr.

DESIGNED BY: AMT
DATE: 8-4-2016
CHECKED BY: YHC
SHEET NO. 27 of 71
DRAWN BY: AWG
DRAWING NO.

PREPARED UNDER THE DIRECTION OF
JOHN C. MORROW
LT. COLONEL, C.E., DISTRICT COMMANDER

SUBMITTED:
Chief, Civil Design Section
APPROVAL RECOMMENDED:
Chief, Engineering Branch
APPROVED:
Chief, Engineering & Technical Services

SANTA CLARA COUNTY, CALIFORNIA
UPPER BERRYESSA CREEK FLOOD RISK MANAGEMENT PROJECT

CROSS SECTIONS

STA. 106+00.00 TO STA. 114+00.00

Sheet reference number
C-205

P:\Watt\T31331 Berryessa Design SCVWD\11 Design\01 Final Design\Sheets\ XS- C-205.dwg 02 Aug 2016 - 7:48pm

CONFORMED DRAWING

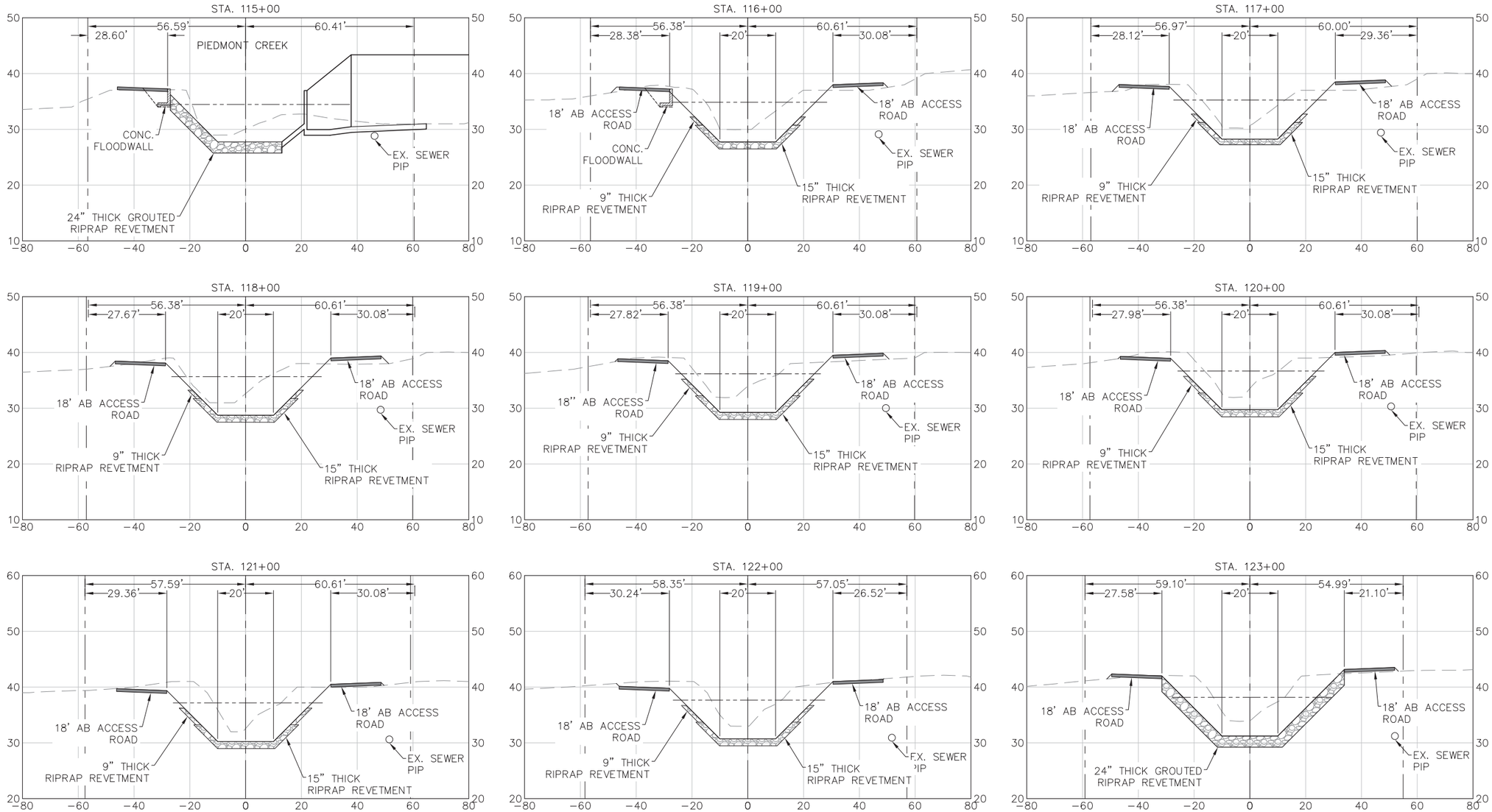

LEGEND

- 100-YR WSEL
- FINISH GRADE
- EXISTING GRADE
- RIGHT OF WAY

20 0 10 20 40

1"=20' H
1"=10' V

NOTE:
CROSS SECTIONS ARE TAKEN LOOKING DOWNSTREAM.

REGISTERED PROFESSIONAL ENGINEER
ARIC TORREYSON
NO. 66068
EXP. 6-30-18
CIVIL
STATE OF CALIFORNIA

US Army Corps of Engineers
San Francisco District
1455 Market Street
San Francisco, CA 94103

TETRA TECH
17885 VON KARMAN AVE., SUITE 500
IRVINE, CA 92614
Phone: (949) 809-5000

Mark	Description	Date	Appr.

DESIGNED BY: AMT
CHECKED BY: YHC
DRAWN BY: AWG
DATE: 8-4-2016
SHEET NO. 28 of 71
DRAWING NO.

PREPARED UNDER THE DIRECTION OF
JOHN C. MORROW
LT. COLONEL, C.E., DISTRICT COMMANDER

SUBMITTED:
Chief, Civil Design Section
APPROVAL RECOMMENDED:
Chief, Engineering Branch
APPROVED:
Chief, Engineering & Technical Services

SANTA CLARA COUNTY, CALIFORNIA
UPPER BERRYESSA CREEK FLOOD RISK MANAGEMENT PROJECT

CROSS SECTIONS

STA. 115+00.00 TO STA. 123+00.00

Sheet reference number
C-206

P:\Watt\T31331 Berryessa Design SCVWD\11 Design\01 Final Design\Sheets\ XS- C-206.dwg 02 Aug 2016 - 7:50pm

CONFORMED DRAWING

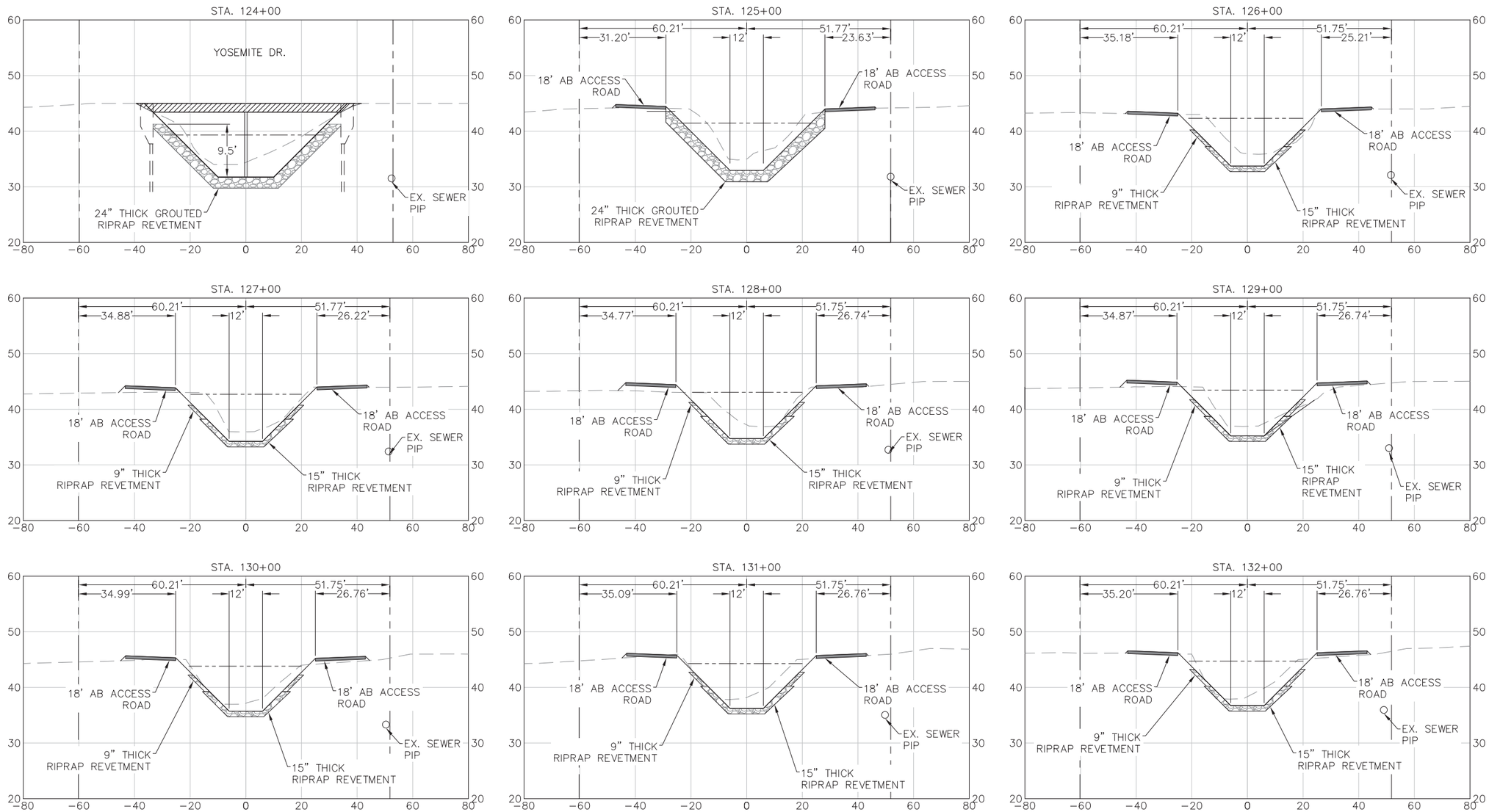

LEGEND

- 100-YR WSEL
- FINISH GRADE
- EXISTING GRADE
- RIGHT OF WAY

20 0 10 20 40

1"=20' H
1"=10' V

NOTE:
CROSS SECTIONS ARE TAKEN LOOKING DOWNSTREAM.

REGISTERED PROFESSIONAL ENGINEER
ARIC TORREYSON
NO. 66068
EXP. 6-30-18
CIVIL
STATE OF CALIFORNIA

US Army Corps of Engineers
San Francisco District
1455 Market Street
San Francisco, CA 94103

TETRA TECH
17885 VON KARMAN AVE.,
SUITE 500
IRVINE, CA 92614
Phone: (949) 809-5000

Mark	Description	Date	Appr.

DESIGNED BY: AMT
DATE: 8-4-2016
CHECKED BY: YHC
SHEET NO. 29 of 71
DRAWN BY: AWG
DRAWING NO.

PREPARED UNDER THE DIRECTION OF
JOHN C. MORROW
LT. COLONEL, C.E., DISTRICT COMMANDER

SUBMITTED:
Chief, Civil Design Section
APPROVAL RECOMMENDED:
Chief, Engineering Branch
APPROVED:
Chief, Engineering & Technical Services

SANTA CLARA COUNTY, CALIFORNIA
UPPER BERRYESSA CREEK FLOOD RISK MANAGEMENT PROJECT

CROSS SECTIONS

STA. 124+00.00 TO STA. 132+00.00

Sheet reference number
C-207

P:\Watt\T31331 Berryessa Design SCVWD\11 Design\01 Final Design\Sheets\ XS- C-207.dwg 02 Aug 2016 - 7:51pm

CONFORMED DRAWING

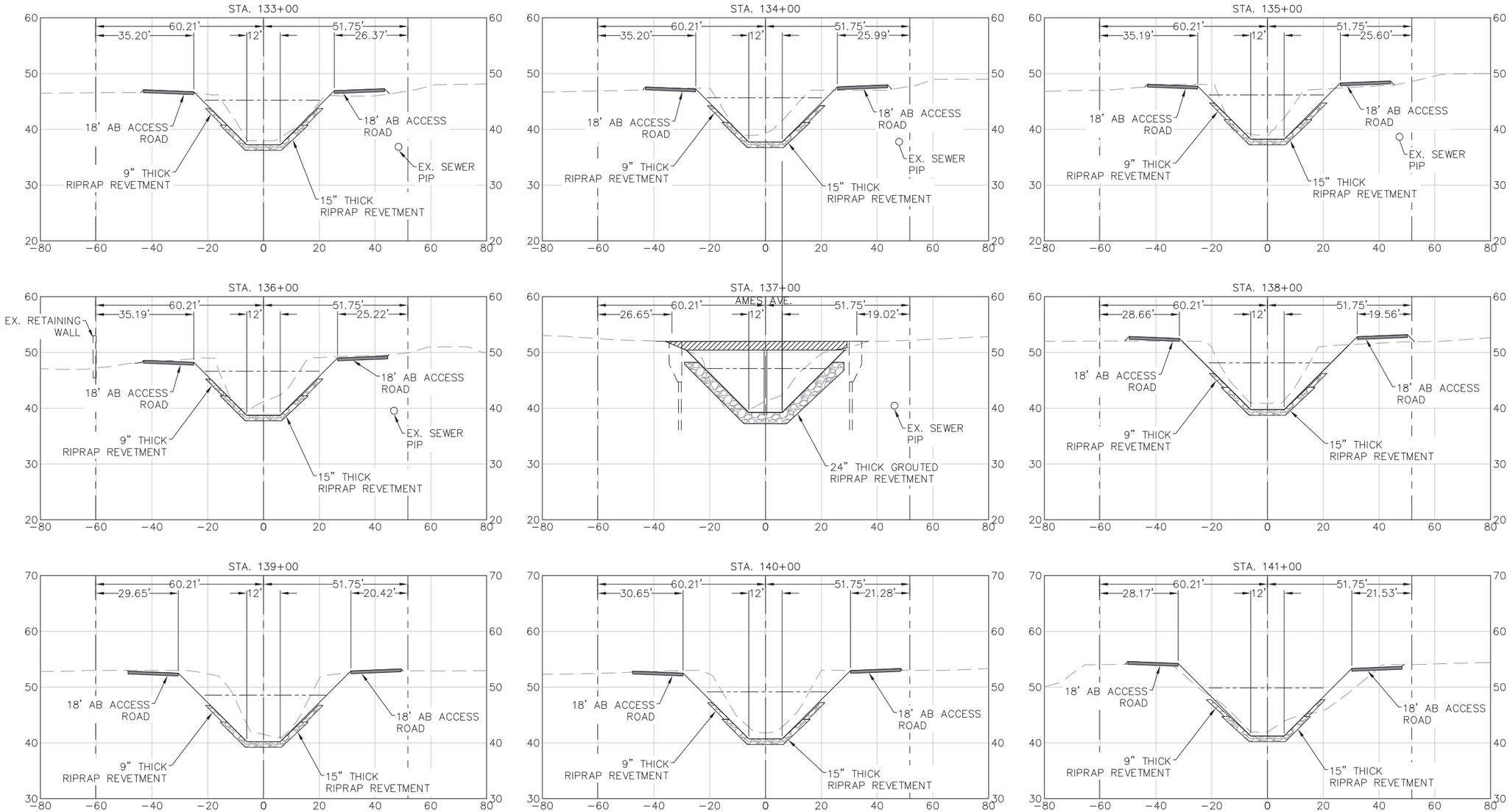

LEGEND

- 100-YR WSEL
- FINISH GRADE
- EXISTING GRADE
- RIGHT OF WAY

20 0 10 20 40

1"=20' H
1"=10' V

NOTE:
CROSS SECTIONS ARE TAKEN LOOKING DOWNSTREAM.

REGISTERED PROFESSIONAL ENGINEER
ARIC TORREYSON
NO. 66068
EXP. 6-30-18
CIVIL
STATE OF CALIFORNIA

US Army Corps of Engineers
San Francisco District
1455 Market Street
San Francisco, CA 94103

TETRA TECH
1798S VON KARMAN AVE., SUITE 500
IRVINE, CA 92614
Phone: (949) 809-5000

Mark	Description	Date	Appr.

DESIGNED BY: AMT
CHECKED BY: YHC
DRAWN BY: AWG
DATE: 8-4-2016
SHEET NO. 30 of 71
DRAWING NO.

PREPARED UNDER THE DIRECTION OF
JOHN C. MORROW
LT. COLONEL, C.E., DISTRICT COMMANDER

SUBMITTED:
Chief, Civil Design Section
APPROVAL RECOMMENDED:
Chief, Engineering Branch
APPROVED:
Chief, Engineering & Technical Services

SANTA CLARA COUNTY, CALIFORNIA
UPPER BERRYESSA CREEK FLOOD RISK MANAGEMENT PROJECT

CROSS SECTIONS

STA. 133+00.00 TO STA. 141+00.00

Sheet reference number
C-208

P:\Watt\T31331 Berryessa Design SCVWD\11 Design\01 Final Design\Sheets\ XS- C-208.dwg 02 Aug 2016 - 7:53pm

CONFORMED DRAWING

STA. 142+00

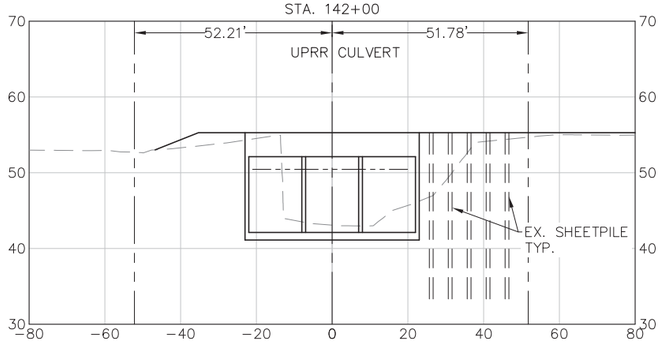

STA. 143+00

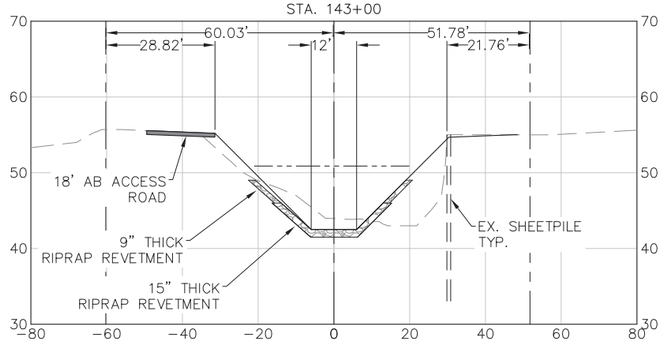

STA. 144+00

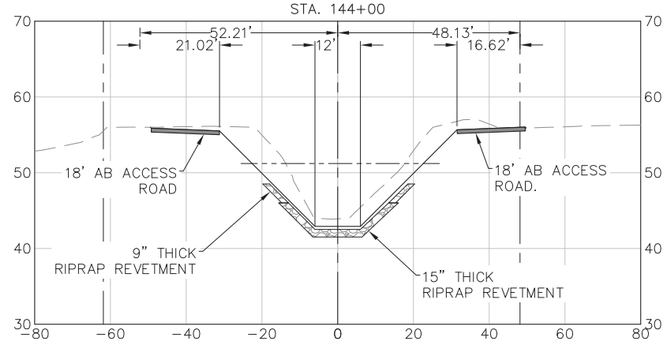

STA. 145+00

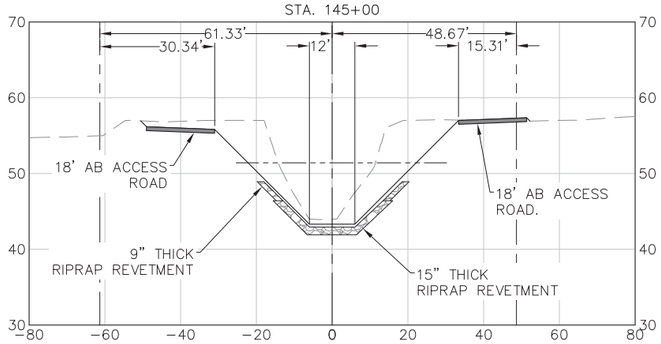

STA. 146+00

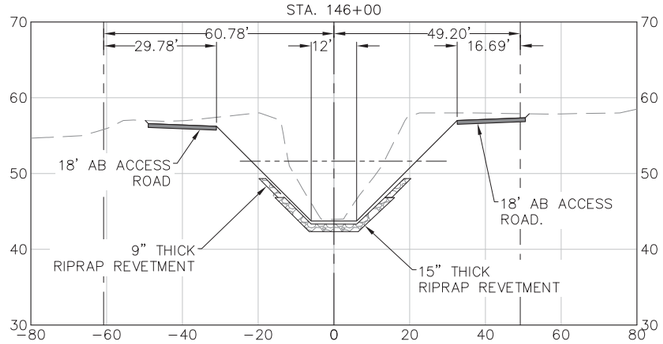

STA. 147+00

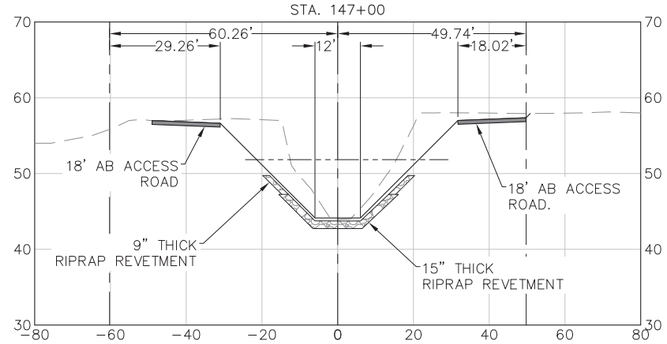

STA. 148+00

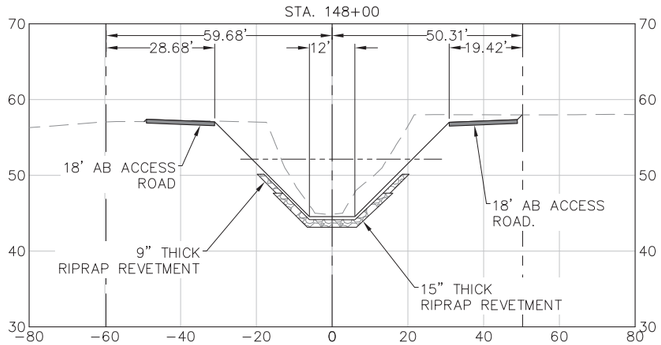

STA. 149+00

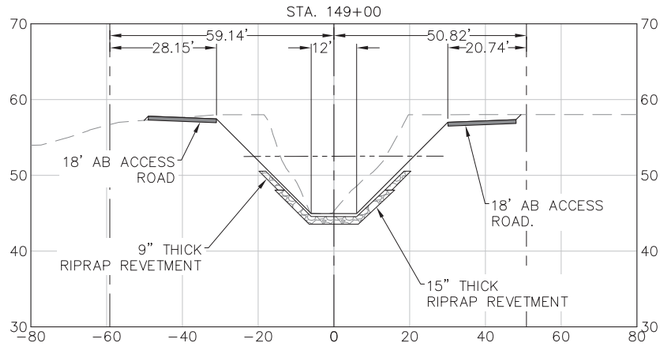

STA. 150+00

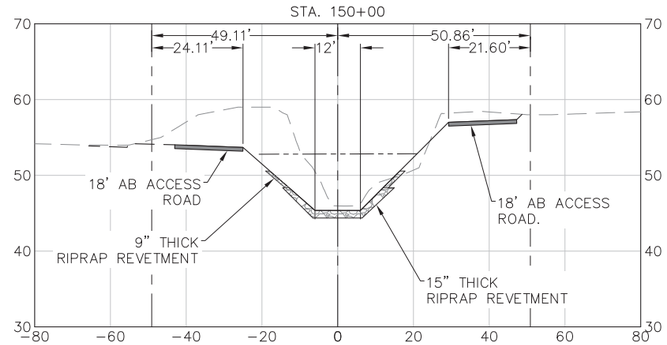

LEGEND

- 100-YR WSEL
- FINISH GRADE
- EXISTING GRADE
- RIGHT OF WAY

20 0 10 20 40

1"=20' H
1"=10' V

NOTE:
CROSS SECTIONS ARE TAKEN LOOKING DOWNSTREAM.

REGISTERED PROFESSIONAL ENGINEER
ARIC TORREYSON
NO. 66068
EXP. 6-30-18
CIVIL
STATE OF CALIFORNIA

US Army Corps of Engineers
San Francisco District
1455 Market Street
San Francisco, CA 94103

TETRA TECH
17885 VON KARMAN AVE., SUITE 500
IRVINE, CA 92614
Phone: (949) 809-5000

Mark	Description	Date	Appr.

DESIGNED BY: AMT
DATE: 8-4-2016
CHECKED BY: YHC
SHEET NO. 31 of 71
DRAWN BY: AWG
DRAWING NO.

SUBMITTED:
Chief, Civil Design Section
APPROVAL RECOMMENDED:
Chief, Engineering Branch
APPROVED:
Chief, Engineering & Technical Services

PREPARED UNDER THE DIRECTION OF
JOHN C. MORROW
LT. COLONEL, C.E., DISTRICT COMMANDER

SANTA CLARA COUNTY, CALIFORNIA
UPPER BERRYESSA CREEK FLOOD RISK MANAGEMENT PROJECT

CROSS SECTIONS

STA. 142+00.00 TO STA. 150+00.00

Sheet reference number
C-209

P:\Watt\T31331 Berryessa Design SCVWD\11 Design\01 Final Design\Sheets\ XS- C-209.dwg 02 Aug 2016 - 7:55pm

CONFORMED DRAWING

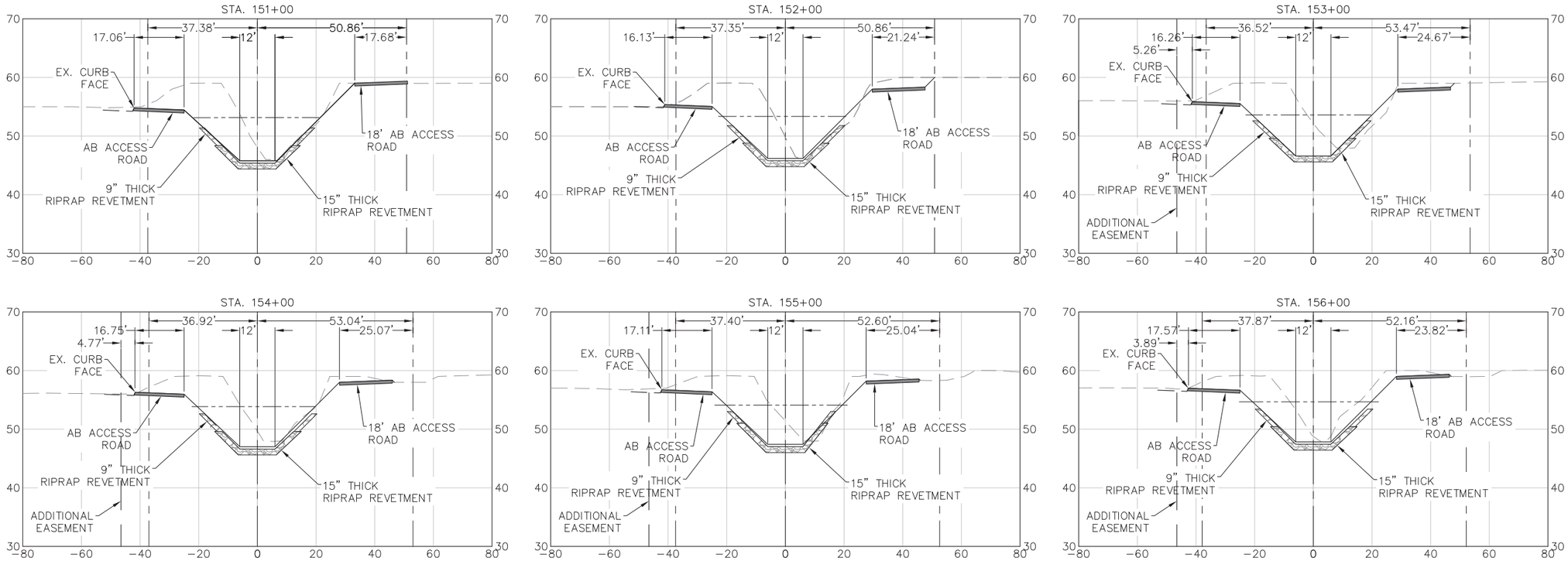

LEGEND

- 100-YR WSEL
- FINISH GRADE
- EXISTING GRADE
- RIGHT OF WAY

20 0 10 20 40

1"=20' H
1"=10' V

NOTE:
CROSS SECTIONS ARE TAKEN LOOKING DOWNSTREAM.

REGISTERED PROFESSIONAL ENGINEER
ARIC TORREYSON
NO. 66068
EXP. 6-30-18
CIVIL
STATE OF CALIFORNIA

US Army Corps of Engineers
San Francisco District
1455 Market Street
San Francisco, CA 94103

TETRA TECH
17885 VON KARMAN AVE.,
SUITE 500
IRVINE, CA 92614
Phone: (949) 809-5000

Mark	Description	Date	Appr.

DESIGNED BY: AMT
DATE: 8-4-2016
CHECKED BY: YHC
SHEET NO. 32 of 71
DRAWN BY: AWG
DRAWING NO.

SUBMITTED:
Chief, Civil Design Section
APPROVAL RECOMMENDED:
Chief, Engineering Branch
APPROVED:
Chief, Engineering & Technical Services

PREPARED UNDER THE DIRECTION OF
JOHN C. MORROW
LT. COLONEL, C.E., DISTRICT COMMANDER

SANTA CLARA COUNTY, CALIFORNIA
UPPER BERRYESSA CREEK FLOOD RISK MANAGEMENT PROJECT

CROSS SECTIONS

STA. 151+00.00 TO STA. 159+00.00

Sheet reference number
C-210

P:\Watt\T31331 Berryessa Design SCVWD\11 Design\01 Final Design\Sheets\ XS- C-210.dwg 02 Aug 2016 - 7:57pm

CONFORMED DRAWING

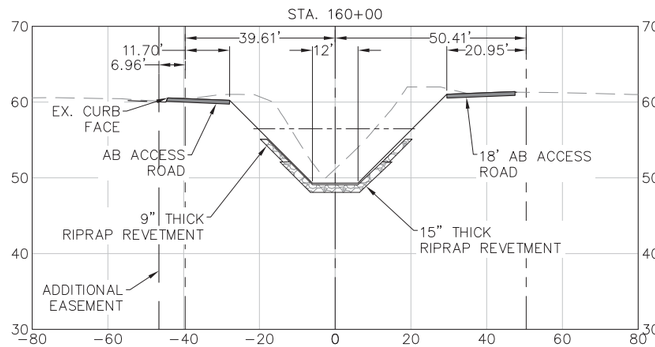

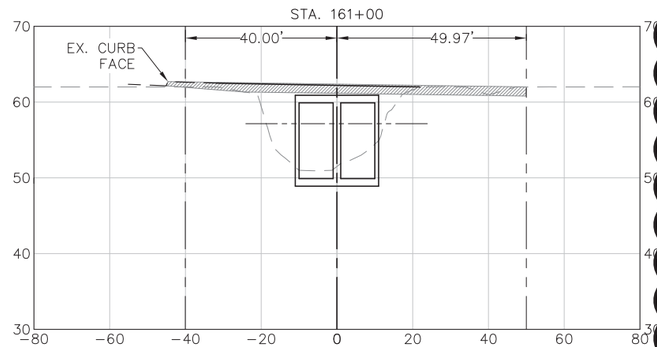

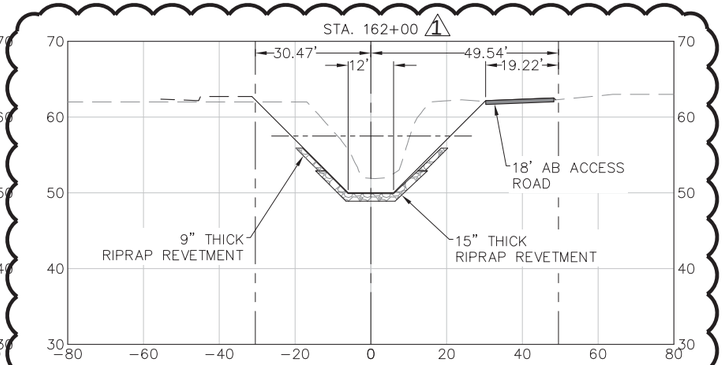

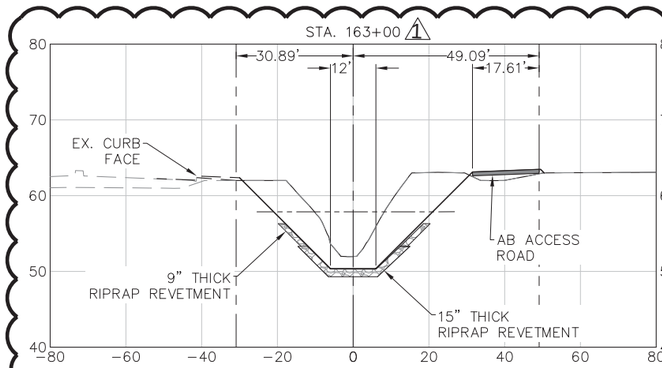

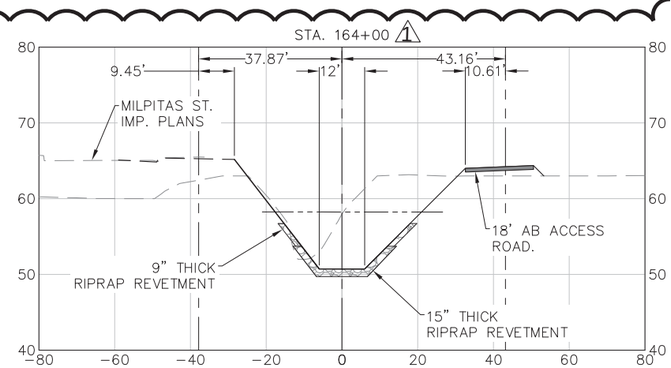

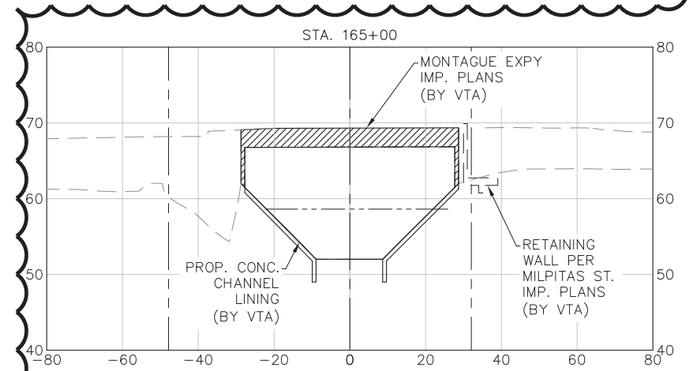

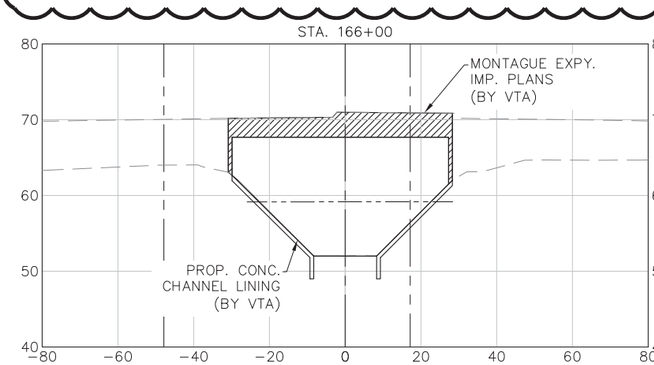

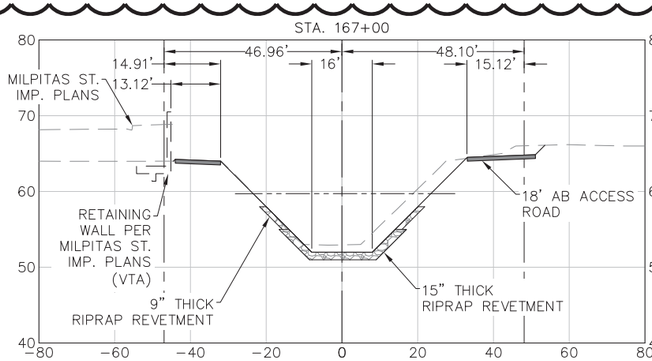

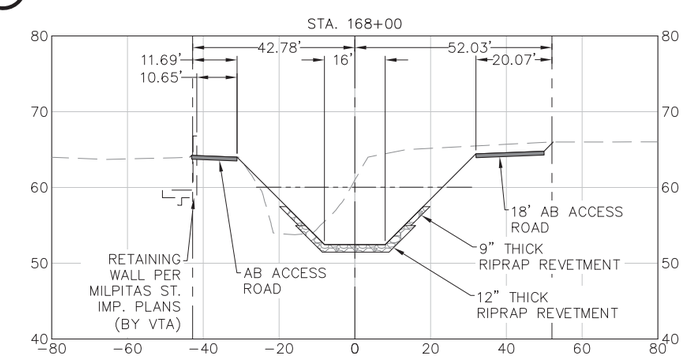

LEGEND

- 100-YR WSEL
- FINISH GRADE
- EXISTING GRADE
- RIGHT OF WAY

20 0 10 20 40

1"=20' H
1"=10' V

NOTE:
CROSS SECTIONS ARE TAKEN LOOKING DOWNSTREAM.

REGISTERED PROFESSIONAL ENGINEER
ARIC TORREYSON
NO. 66068
EXP. 6-30-18
CIVIL
STATE OF CALIFORNIA

US Army Corps of Engineers
San Francisco District
1455 Market Street
San Francisco, CA 94103

TETRA TECH
17885 VON KARMAN AVE., SUITE 500
IRVINE, CA 92614
Phone: (949) 809-5000

Mark	Description	Date	Appr.
1	LEFT BANK ACCESS ROAD DELETED	7/6/16	

DESIGNED BY: AMT
CHECKED BY: YHC
DRAWN BY: AWG
DATE: 8-4-2016
SHEET NO. 33 of 71
DRAWING NO.

PREPARED UNDER THE DIRECTION OF
JOHN C. MORROW
LT. COLONEL, C.E., DISTRICT COMMANDER

SUBMITTED:
Chief, Civil Design Section
APPROVAL RECOMMENDED:
Chief, Engineering Branch
APPROVED:
Chief, Engineering & Technical Services

SANTA CLARA COUNTY, CALIFORNIA
UPPER BERRYESSA CREEK FLOOD RISK MANAGEMENT PROJECT

CROSS SECTIONS

STA. 160+00.00 TO STA. 168+00.00

Sheet reference number
C-211

P:\Watt\T31331 Berryessa Design SCVWD\11 Design\01 Final Design\Sheets\ XS- C-211.dwg 02 Aug 2016 - 7:58pm

CONFORMED DRAWING

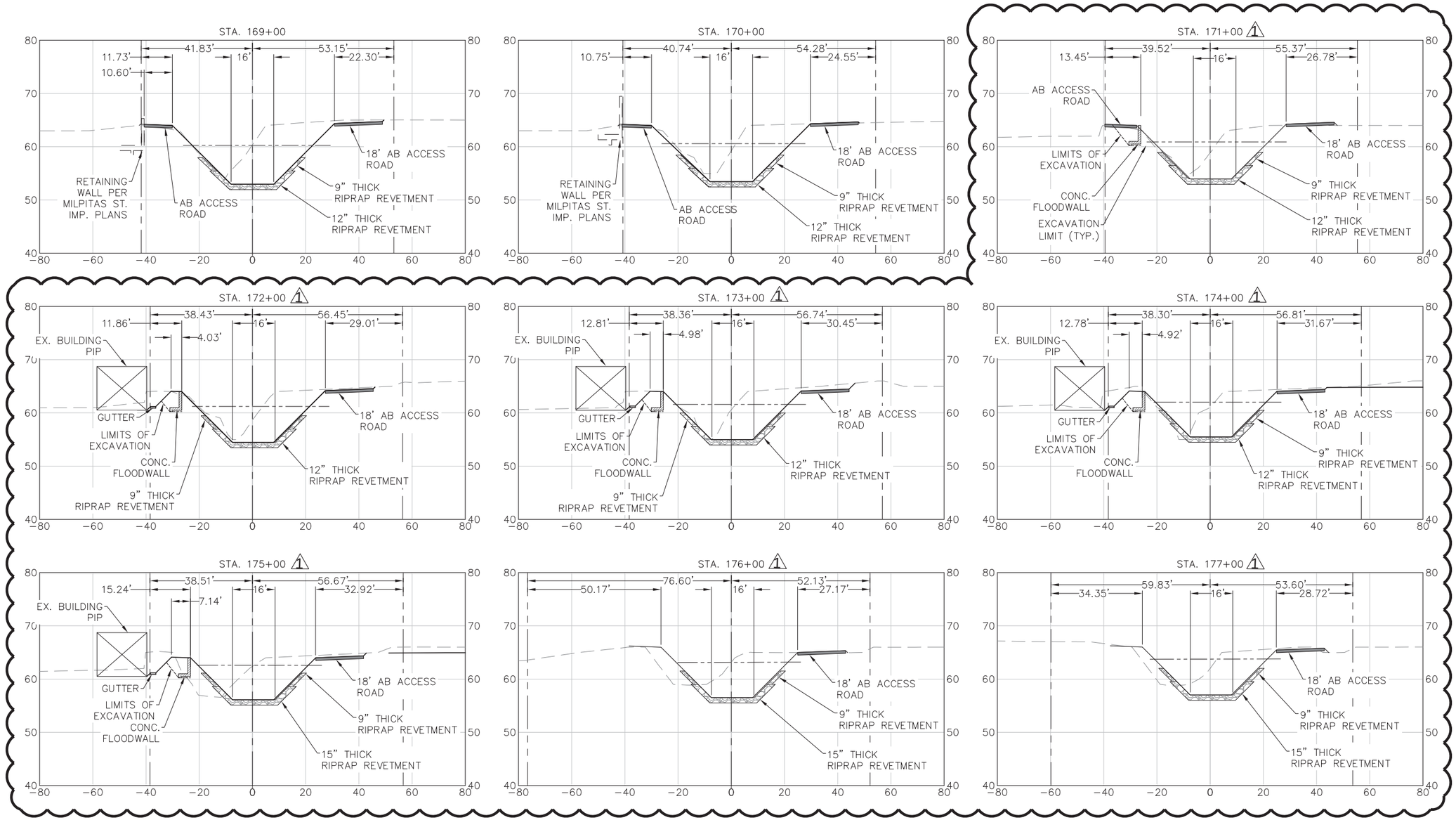

LEGEND

- 100-YR WSEL
- FINISH GRADE
- EXISTING GRADE
- RIGHT OF WAY

20 0 10 20 40

1"=20' H
1"=10' V

NOTE:
CROSS SECTIONS ARE TAKEN LOOKING DOWNSTREAM.

REGISTERED PROFESSIONAL ENGINEER
ARIC TORREYSON
NO. 66068
EXP. 6-30-18
CIVIL
STATE OF CALIFORNIA

US Army Corps of Engineers
San Francisco District
1455 Market Street
San Francisco, CA 94103

TETRA TECH
17885 VON KARMAN AVE.,
SUITE 500
IRVINE, CA 92614
Phone: (949) 809-5000

Mark	Description	Date	Appr.
1	LEFT BANK ACCESS ROAD DELETED	7/6/16	

DESIGNED BY: AMT
CHECKED BY: YHC
DRAWN BY: AWG
DATE: 8-4-2016
SHEET NO. 34 of 71
DRAWING NO.

SUBMITTED:
Chief, Civil Design Section
APPROVAL RECOMMENDED:
Chief, Engineering Branch
APPROVED:
Chief, Engineering & Technical Services

PREPARED UNDER THE DIRECTION OF
JOHN C. MORROW
LT. COLONEL, C.E., DISTRICT COMMANDER

SANTA CLARA COUNTY, CALIFORNIA
UPPER BERRYESSA CREEK FLOOD RISK MANAGEMENT PROJECT

CROSS SECTIONS

STA. 169+00.00 TO STA. 177+00.00

Sheet reference number
C-212

P:\Watr\T31331 Berryessa Design SCVWD\11 Design\01 Final Design\Sheets\ XS- C-212.dwg 02 Aug 2016 - 8:00pm

CONFORMED DRAWING

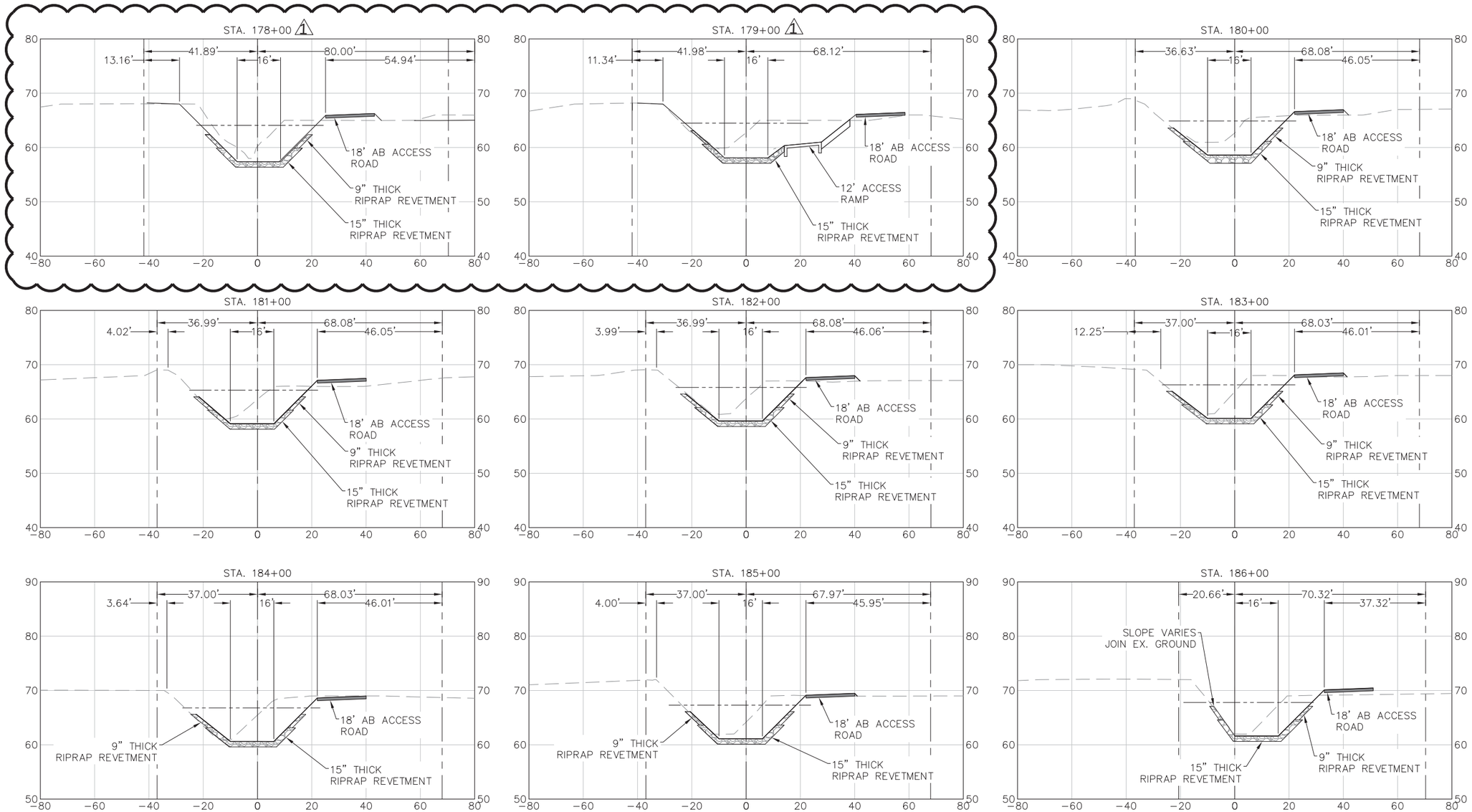

LEGEND

- 100-YR WSEL
- FINISH GRADE
- EXISTING GRADE
- RIGHT OF WAY

20 0 10 20 40

1"=20' H
1"=10' V

NOTE:
CROSS SECTIONS ARE TAKEN LOOKING DOWNSTREAM.

REGISTERED PROFESSIONAL ENGINEER
ARIC TORREYSON
NO. 66068
EXP. 6-30-18
CIVIL
STATE OF CALIFORNIA

US Army Corps of Engineers
San Francisco District
1455 Market Street
San Francisco, CA 94103

TETRA TECH
17885 VON KARMAN AVE., SUITE 500
IRVINE, CA 92614
Phone: (949) 809-5000

Mark	Description	Date	Appr.
1	LEFT BANK ACCESS ROAD AND ACCESS RAMP DELETED	7/6/16	

DESIGNED BY: AMT
CHECKED BY: YHC
DRAWN BY: AWG
DATE: 8-4-2016
SHEET NO. 35 of 71
DRAWING NO.

SUBMITTED:
Chief, Civil Design Section
APPROVAL RECOMMENDED:
Chief, Engineering Branch
APPROVED:
Chief, Engineering & Technical Services

PREPARED UNDER THE DIRECTION OF
JOHN C. MORROW
LT. COLONEL, C.E., DISTRICT COMMANDER

SANTA CLARA COUNTY, CALIFORNIA
UPPER BERRYESSA CREEK FLOOD RISK MANAGEMENT PROJECT

CROSS SECTIONS

STA. 178+00.00 TO STA. 186+00.00

Sheet reference number
C-213

P:\Wat\T31331 Berryessa Design SCVWD\11 Design\01 Final Design\Sheets\ XS- C-213.dwg 02 Aug 2016 - 8:02pm

CONFORMED DRAWING

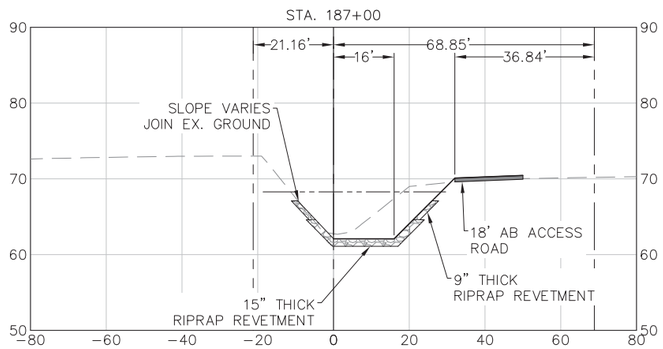

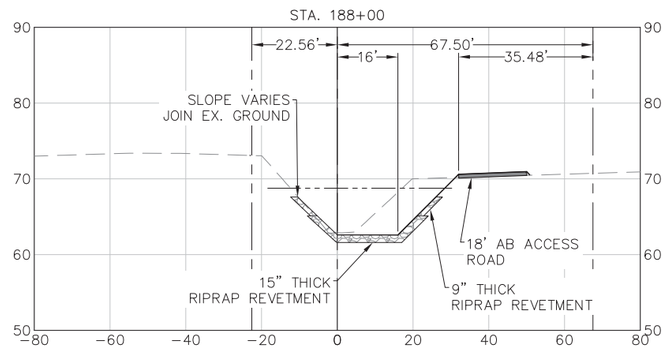

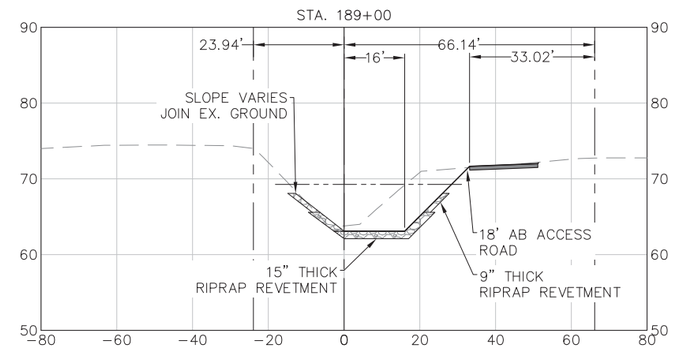

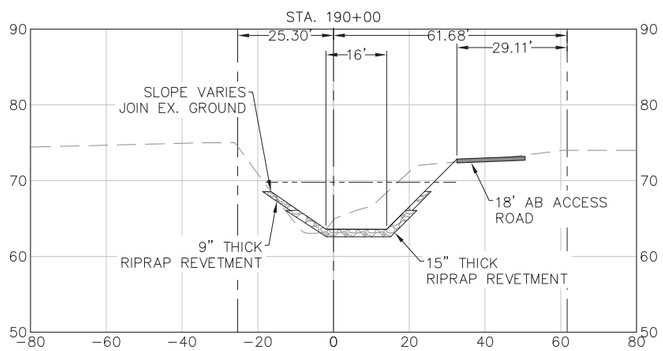

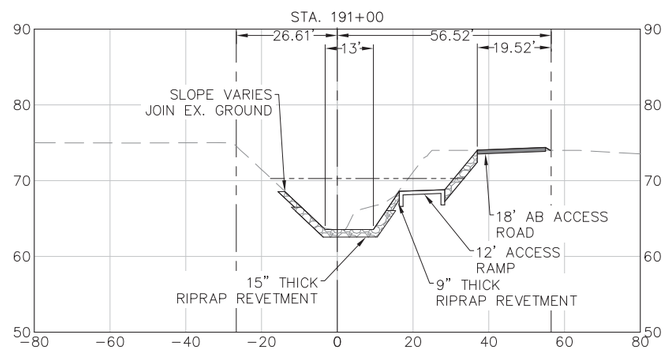

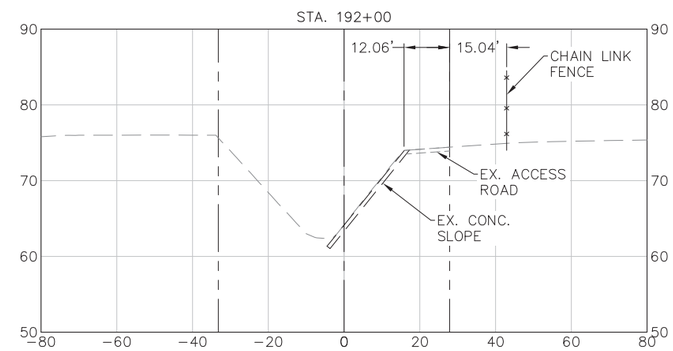

LEGEND

- 100-YR WSEL
- FINISH GRADE
- EXISTING GRADE
- RIGHT OF WAY

20 0 10 20 40

1"=20' H
1"=10' V

NOTE:
CROSS SECTIONS ARE TAKEN LOOKING DOWNSTREAM.

REGISTERED PROFESSIONAL ENGINEER
ARIC TORREYSON
NO. 66068
EXP. 6-30-18
CIVIL
STATE OF CALIFORNIA

US Army Corps of Engineers
San Francisco District
1455 Market Street
San Francisco, CA 94103

TETRA TECH
17885 VON KARMAN AVE.,
SUITE 500
IRVINE, CA 92614
Phone: (949) 809-5000

Mark	Description	Date	Appr.

DESIGNED BY: AMT | CHECKED BY: YHC | DRAWN BY: AWG
DATE: 8-4-2016 | SHEET NO. 36 of 71 | DRAWING NO.

SUBMITTED:
Chief, Civil Design Section
APPROVAL RECOMMENDED:
Chief, Engineering Branch
APPROVED:
Chief, Engineering & Technical Services

PREPARED UNDER THE DIRECTION OF
JOHN C. MORROW
LT. COLONEL, C.E., DISTRICT COMMANDER

SANTA CLARA COUNTY, CALIFORNIA
UPPER BERRYESSA CREEK FLOOD RISK MANAGEMENT PROJECT

CROSS SECTIONS
STA. 187+00.00 TO STA. 191+00.00

Sheet reference number
C-214

P:\Watr\T31331 Berryessa Design SCVWD\11 Design\01 Final Design\Sheets\ XS- C-214.dwg 02 Aug 2016 - 8:04pm

CONFORMED DRAWING

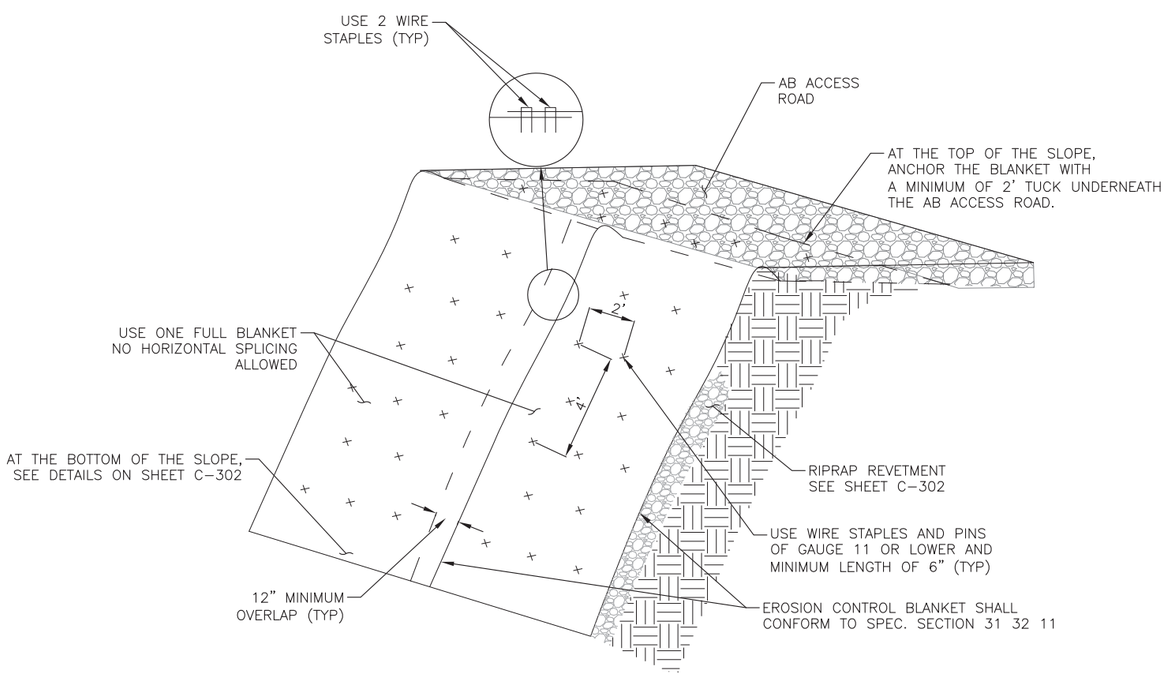

INSTALLATION OF EROSION CONTROL ON CHANNEL SLOPES

N.T.S

US Army Corps of Engineers
San Francisco District
1455 Market Street
San Francisco, CA 94103

TETRA TECH
17885 VON KARMAN AVE.,
SUITE 500
IRVINE, CA 92614
Phone: (949) 809-5000

Mark	Description	Date	Appr.

SUBMITTED:

Chief, Civil Design Section
APPROVAL RECOMMENDED:

Chief, Engineering Branch
APPROVED:

Chief, Engineering & Technical Services

DESIGNED BY: AMT | CHECKED BY: YHC | DRAWN BY: AWG

DATE: 8-4-2016 | SHEET NO. 37 of 71 | DRAWING NO.

PREPARED UNDER THE DIRECTION OF
JOHN C. MORROW
LT. COLONEL, C.E., DISTRICT COMMANDER

SANTA CLARA COUNTY, CALIFORNIA
UPPER BERRYESSA CREEK FLOOD RISK MANAGEMENT PROJECT

EROSION CONTROL BLANKET DETAILS

REGISTERED PROFESSIONAL ENGINEER
ARIC TORRESON
NO. 66068
EXP. 6-30-18
CIVIL
STATE OF CALIFORNIA

Sheet reference number
C-300

P:\Watt\T31331 Berryessa Design SCVWD\11 Design\01 Final Design\Sheets\ C-300 Geoweb DTL.dwg 02 Aug 2016 - 5:33pm

CONFORMED DRAWING

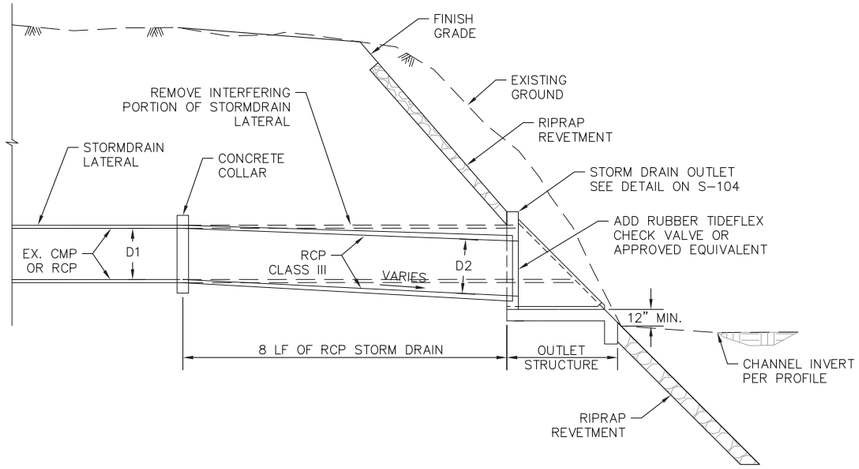

STORM DRAIN OUTLET DETAIL
N.T.S.

CONCRETE COLLAR NOTES:

1. REINFORCING SHALL BE USED WHERE THE PIPE DIAMETER IS GREATER THAN 21 INCHES AND ON ALL PIPES WHERE THE SPACES BETWEEN THE EXTREME OUTER ENDS IS 3 INCHES OR LARGER.

PIPE DIAMETER	NO. OF CIRCULAR TIES
21 IN. OR LESS	3
24 IN. TO 30 IN.	3
33 IN. TO 57 IN.	4

2. WHERE THE PIPE IS 21 INCHES OR LESS IN DIAMETER, AN INTERIOR FORM OF UNSEALED SONO-TUBE OR EQUAL SHALL BE USED TO PROVIDE A SMOOTH INTERIOR JOINT. THE PAPER FORM MAY BE LEFT IN PLACE. WHEN THE PIPE IS 24 INCHES OR LARGER, A REMOVABLE INTERIOR FORM SHALL BE USED OR THE INTERIOR JOINT SHALL BE COMPLETELY FILLED WITH MORTAR AND NEATLY POINTED.

CONCRETE COLLAR		
PIPE DIAMETER (IN.)	X (IN.)	T (IN.)
8	12	4
12	12	4
15	12	5
18	12	5
24	18	6
30	18	7
36	18	9

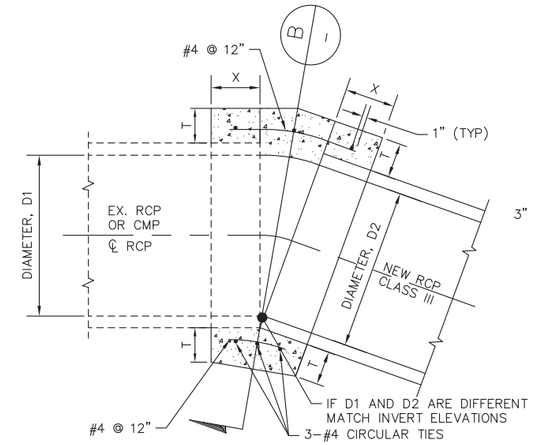

CONCRETE COLLAR PROFILE
N.T.S.

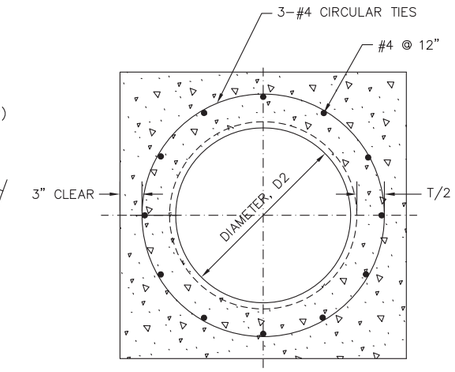

SECTION B
N.T.S.

STORM DRAIN OUTLET								
		EXISTING PIPE		NEW PIPE		HEADWALL		
NEW PIPE STATION	STATION OFFSET (FT.)	TYPE	DIAMETER, D1 (IN.)	TYPE	DIAMETER, D2 (IN.)	L (FT.)	H (FT.)	INV. EL. (FT.)
87+64.30	24.12 RT.	CMP	24	RCP	24	SEE OUTLET TYPE 2		19.23
90+16.85	26.19 RT.	CMP	18	RCP	18	8.00	4.00	21.07
92+63.07	35.69 RT.	CMP	12	RCP	18	SEE OUTLET TYPE 2		27.72
97+64.58	27.64 RT.	RCP	36	RCP	36	11.00	5.50	23.31
98+88.87	26.87 RT.	CMP	24	RCP	24	9.00	4.50	23.69
109+27.35	26.60 RT.	CMP	24	RCP	24	9.00	4.50	26.80
137+45.87	15.59 RT.	CMP	30	RCP	30	10.00	5.00	41.54
137+76.54	21.91 LT.	CMP	8	RCP	18	8.00	4.00	41.69
151+03.88	13.47 LT.	CMP	15	RCP	18	8.00	4.00	47.72
151+78.24	12.24 RT.	RCP	30	RCP	30	10.00	5.00	48.03
155+94.49	13.38 LT.	CMP	10	RCP	18	8.00	4.00	49.81
161+41.45	11.15 RT.	CMP	18	RCP	18	PRE-CAST JUNCTION		56.00
162+42.18	12.50 LT.	CMP	18	RCP	18	8.00	4.00	52.25
163+44.63	12.99 RT.	CMP	10	RCP	18	8.00	4.00	52.95
163+77.93	12.83 LT.	CMP	18	RCP	18	8.00	4.00	53.10
171+38.56	16.25 RT.	CMP	18	RCP	18	8.00	4.00	56.26
172+95.03	14.51 RT.	CMP	18	RCP	18	8.00	4.00	57.04
174+66.42	14.54 RT.	CMP	18	RCP	18	8.00	4.00	57.90
178+69.78	11.51 RT.	CMP	15	RCP	18	8.00	4.00	59.92
183+04.17	13.91 RT.	CMP	18	RCP	18	8.00	4.00	62.09
186+55.09	20.32 RT.	CMP	18	RCP	18	8.00	4.00	63.82
190+63.17	31.03 RT.	CMP	18	RCP	18	8.00	4.00	65.71
PIEDMONT CREEK		UNK	18	RCP	18	SEE OUTLET TYPE 2		32.81

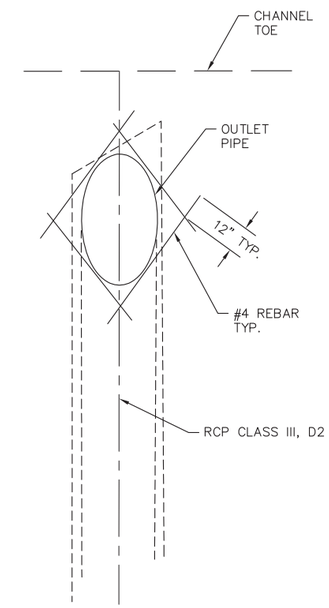

OUTLET TYPE 2 PLAN
N.T.S.

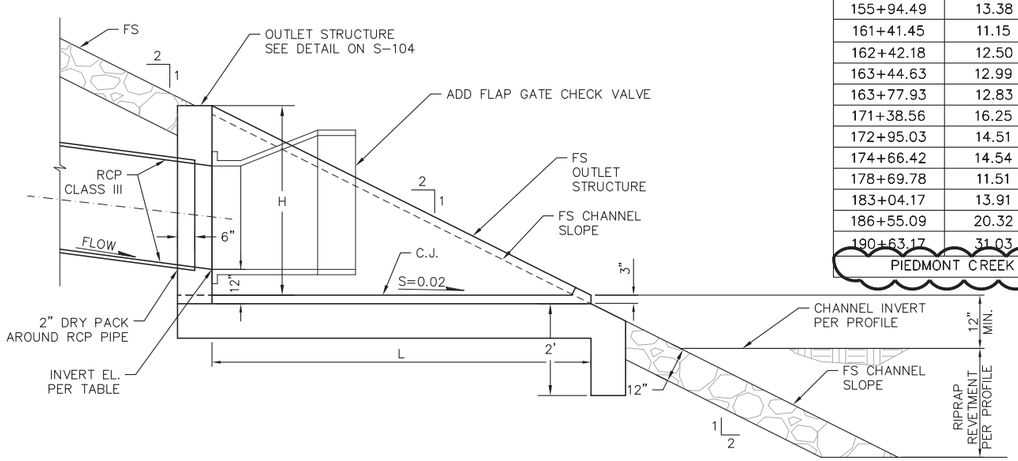

OUTLET TYPE 1 DETAIL
N.T.S.

STORM DRAIN OUTLET NOTES:

1. STATION AND ELEVATIONS SHOWN ON THE TABLE ARE CONSIDERED AS APPROXIMATE.
2. CONTRACTOR TO SURVEY THE UPSTREAM MANHOLE INVERT AND PROVIDE TO THE ENGINEER TO VERIFY THE LOCATION AND ELEVATION OF THE EXISTING STORM DRAIN.
3. THE STORM DRAIN OUTLET TABLE MAY BE REVISED BASED ON THE SURVEYED LOCATION AND ELEVATION OF THE UPSTREAM MANHOLE INVERT.
4. STATION 161+41.45 OULET STRUCTURE IS PRE-CAST WITH THE RCB, SHEET SHEET SR-100

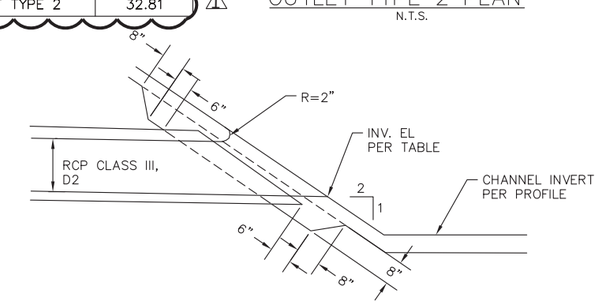

OUTLET TYPE 2 PROFILE
N.T.S.

REGISTERED PROFESSIONAL ENGINEER
ARIC TORRESON
NO. 66068
EXP. 6-30-16
CIVIL
STATE OF CALIFORNIA

P:\Watt\T31331 Berryessa Design SCVWD\11 Design\01 Final Design\Sheets\ C-301 PIPE JUNCTION.dwg 02 Aug 2016 - 5:35pm

US Army Corps of Engineers
San Francisco District
1455 Market Street
San Francisco, CA 94103

TETRA TECH
1788S VON KARMAN AVE.,
SUITE 500
IRVINE, CA 92614
Phone: (949) 809-5000

Mark	Description	Date	Appr.
1	ADD STORM DRAIN OUTLET STRUCT.	7/6/16	

DESIGNED BY: AMT
CHECKED BY: YHC
DRAWN BY: AWG
DATE: 8-4-2016
SHEET NO. 38 of 71
DRAWING NO.

SUBMITTED:
Chief, Civil Design Section
APPROVAL RECOMMENDED:
Chief, Engineering Branch
APPROVED:
Chief, Engineering & Technical Services

PREPARED UNDER THE DIRECTION OF
JOHN C. MORROW
LT. COLONEL, C.E., DISTRICT COMMANDER

SANTA CLARA COUNTY, CALIFORNIA
UPPER BERRYESSA CREEK FLOOD RISK MANAGEMENT PROJECT

PIPE OUTLET DETAILS

Sheet reference number
C-301

CONFORMED DRAWING

RIPRAP REVETMENT RUNUP HEIGHT

LOCATION	RUNUP HEIGHT, H
STA. 87+21 TO STA. 114+72	2.0'
STA. 115+43 TO STA. 122+80	3.0'
STA. 122+80 TO STA. 125+19	9.5'
STA. 125+19 TO STA. 149+50	3.5'
STA. 149+50 TO STA. 164+43	3.0'
STA. 167+56 TO STA. 170+00	2.5'
STA. 171+00 TO STA. 178+00	2.5'
STA. 180+00 TO STA. 190+27	2.5'

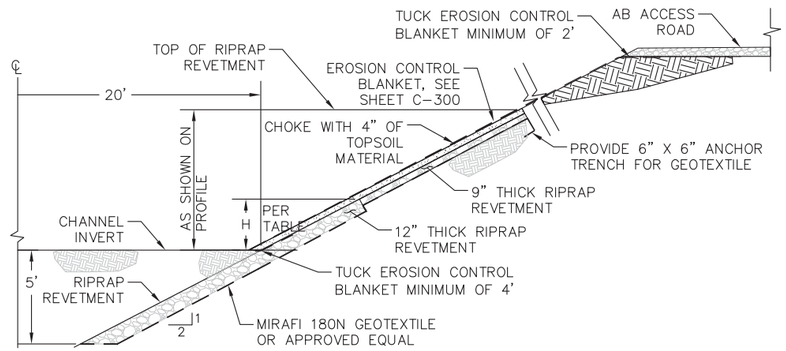

CHANNEL RIPRAP REVETMENT
STA. 87+91.52 TO STA. 114+52.43

N.T.S.

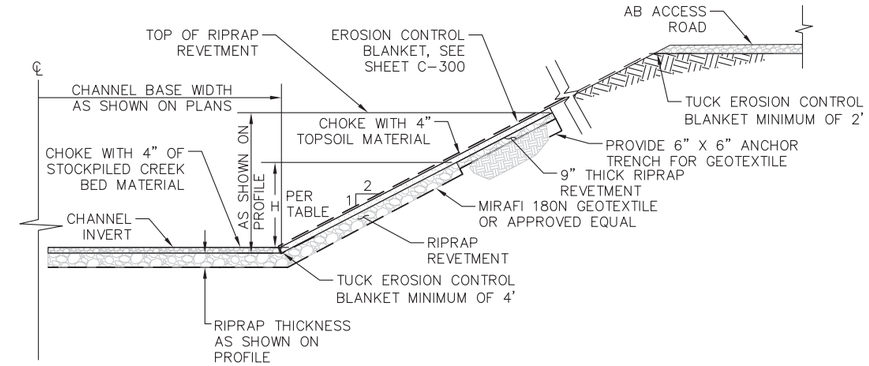

CHANNEL RIPRAP REVETMENT
STA. 114+52.43 TO STA. 191+77.32

N.T.S.

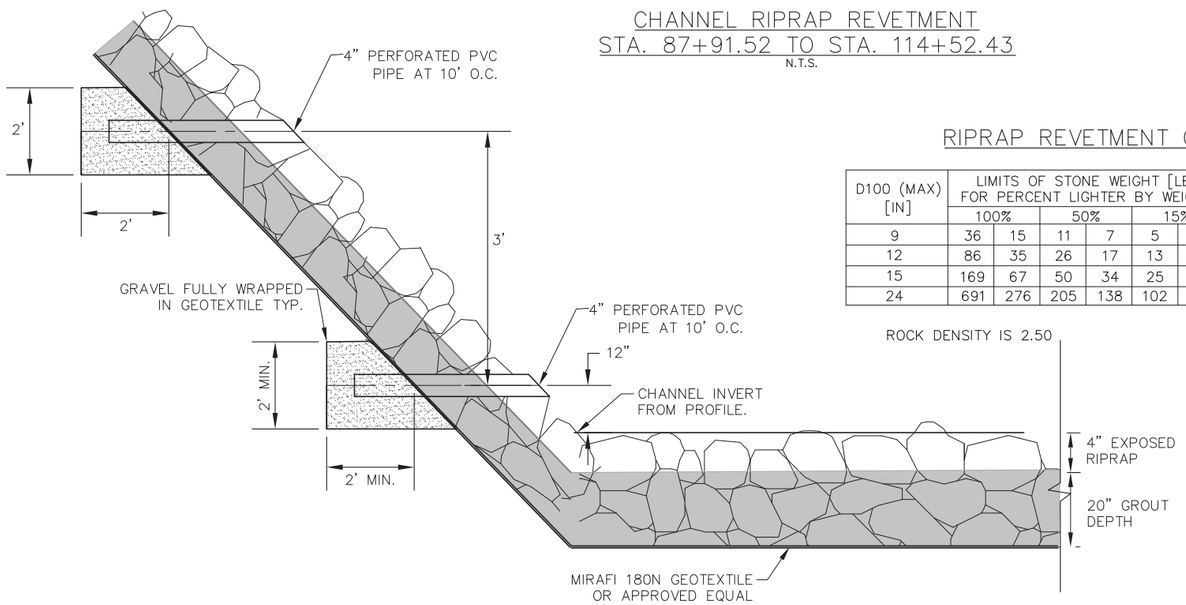

GROUTED RIPRAP REVETMENT

N.T.S.

RIPRAP REVETMENT GRADATION

D100 (MAX) [IN]	LIMITS OF STONE WEIGHT [LB] FOR PERCENT LIGHTER BY WEIGHT						D30 (MIN) [LBS]	D90 (MIN) [LBS]
	100%		50%		15%			
9	36	15	11	7	5	2	4.1	12.2
12	86	35	26	17	13	5	9.0	28.0
15	169	67	50	34	25	11	18.5	55.7
24	691	276	205	138	102	43	74.5	224.1

ROCK DENSITY IS 2.50

RIPRAP REVETMENT LOCATION

STATIONS	ROCK SIZE D100 (MAX) [IN]
STA. 87+21.43 TO STA. 114+52.43	9
STA. 114+52.43 TO STA. 115+43.00	24 (GROUTED)
STA. 115+43.00 TO STA. 122+80.00	15
STA. 122+80.00 TO STA. 125+19.33	24 (GROUTED)
STA. 125+19.33 TO STA. 136+75.00	15
STA. 136+75.00 TO STA. 137+80.00	24 (GROUTED)
STA. 137+80.00 TO STA. 164+92.98	15
STA. 167+02.97 TO STA. 174+90.00	12
STA. 174+90.00 TO STA. 191+77.32	15

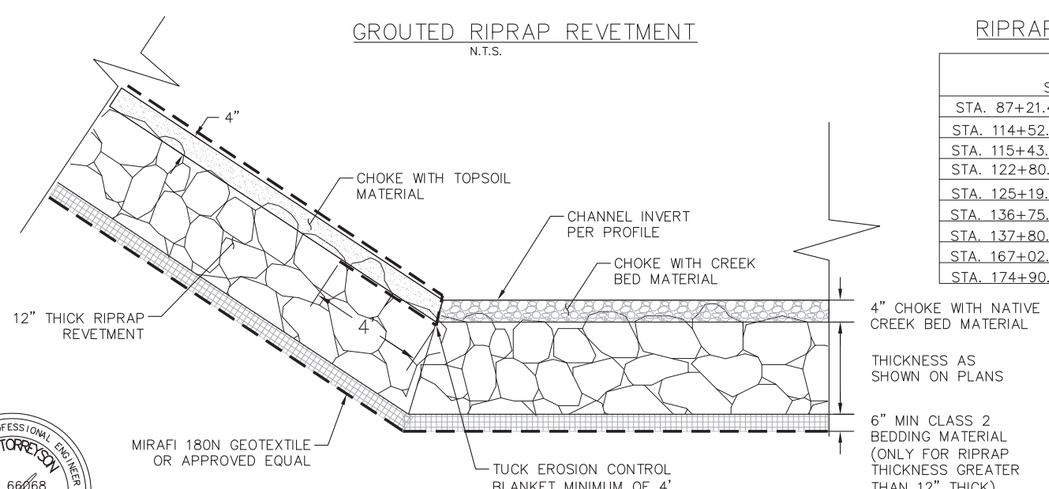

RIPRAP REVETMENT DETAIL

N.T.S.

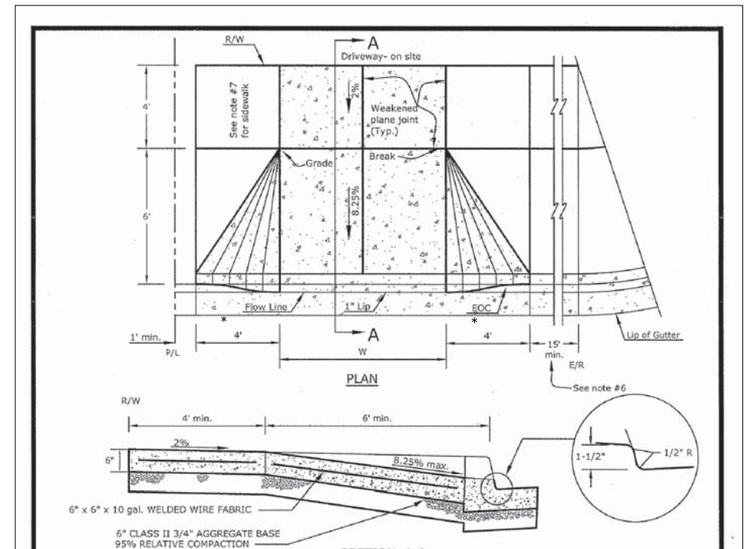

NOTES:

1. Score lines shall be ¼ inch deep.
2. Use Portland Cement Concrete containing not less than 564 lbs. of Type I or I/II Portland Cement per cubic yard with a compressive strength of not less than 3000 psi. at 28 days, with a medium broom finish min.
3. Driveway locations shall be approved by the City Engineer.
4. The minimum spacing between driveways serving the same parcel shall be 22 feet (edge to edge).
5. Access to developed site shall be maintained.
6. Subject to Standard Drawing No. 405 as it relates to sight distance.
7. For industrial driveway see sidewalk transition Standard Drawing No.436, option 5 or 6.
8. For commercial driveway see sidewalk transition Standard Drawing No.436, option 4.
9. Approaches under 33' in width shall be scored 1" deep at center of approach and for approaches 33' or more in width shall be scored 1" deep at 1/3 lines.
10. The sidewalk within the radius return shall be scored at the break line.

DRIVEWAY TYPE	W (ft)
Commercial two-way	36
Commercial one-way	20
Industrial two-way	32
Industrial one-way	20

NOT TO SCALE

CITY OF MILPITAS, ENGINEERING DIVISION

REVISION	DATE
1	1981
2	2001
3	2010

COMMERCIAL/INDUSTRIAL DRIVEWAY WITH FLARES

APPROVED BY: PUBLIC WORKS DIRECTOR / CITY ENGINEER RCE No. 40283

STANDARD DRAWING NO. 432

DATE : 6/15/10

SHEET 1 OF 1

NOTE (*) MODIFY WIDTH TO MAINTAIN 8.25% MAX SLOPE WHEN SIDWALK IS NOT PRESENT.

DRIVEWAY ENTRANCE

N.T.S.

REGISTERED PROFESSIONAL ENGINEER ARIC TORREYSON NO. 66068 EXP. 6-30-16 CIVIL STATE OF CALIFORNIA

US Army Corps of Engineers
San Francisco District
1455 Market Street
San Francisco, CA 94103

TETRA TECH
1788S VON KARMAN AVE., SUITE 500
IRVINE, CA 92614
Phone: (949) 809-5000

Mark	Description	Date	Appr.

DESIGNED BY: AMT | CHECKED BY: YHC | DRAWN BY: AWG
DATE: 8-4-2016 | SHEET NO. 39 of 71 | DRAWING NO.
PREPARED UNDER THE DIRECTION OF JOHN C. MORROW LT. COLONEL, C.E., DISTRICT COMMANDER
SUBMITTED: Chief, Civil Design Section
APPROVAL RECOMMENDED: Chief, Engineering Branch
APPROVED: Chief, Engineering & Technical Services

SANTA CLARA COUNTY, CALIFORNIA
UPPER BERRYESSA CREEK FLOOD RISK MANAGEMENT PROJECT

RIPRAP PROTECTION DETAILS

Sheet reference number C-302

P:\Wat\T31331 Berryessa Design SCVWD\11 Design\01 Final Design\Sheets\ C-302 Riprap Toe Down.dwg 03 Aug 2016 - 9:35am

CONFORMED DRAWING

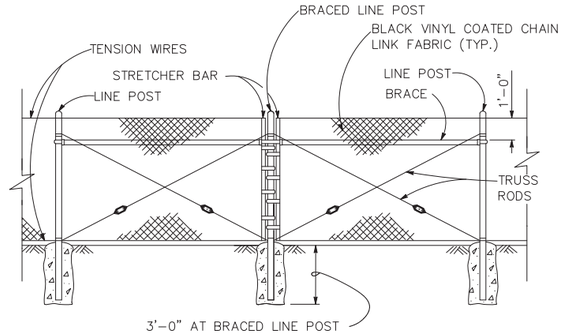

BRACED LINE POST INSTALLATION

BRACED LINE POST AT INTERVALS NOT EXCEEDING 1000'

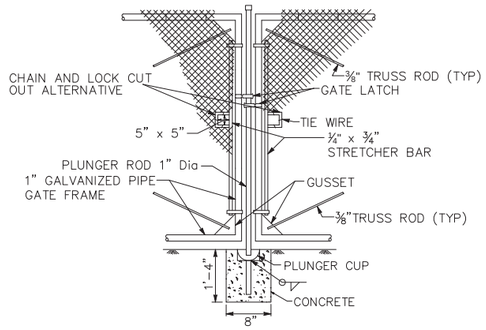

DOUBLE SWING GATE REMOVABLE CENTER POST

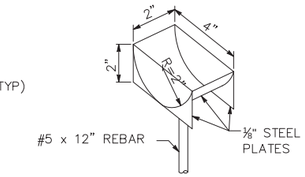

PLUNGER CUP DETAIL

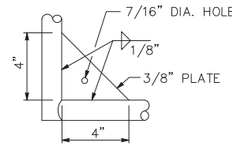

GUSSET DETAIL

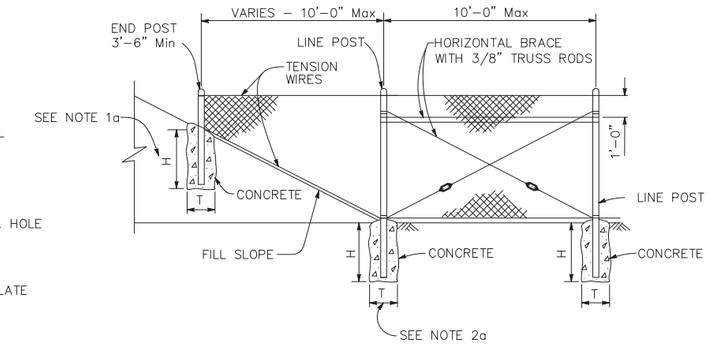

METHOD OF ERECTING FENCE FOR FILL SLOPE

NOTES:

1a. H IS 2'-6" FOR FABRIC LESS THAN 5'-0" HIGH.
H IS 3'-0" FOR FABRIC 5'-0" AND OVER FOR ERECTING FENCE FOR FILL SLOPE.
H IS MINIMUM OF 9" FOR FENCE INTO CONCRETE HEADWALL.

2a. T IS NOT LESS THAN 3 TIMES MAXIMUM CROSS SECTION OF POST WITH MINIMUM OF 8" FOR ERECTING FENCE FOR FILL SLOPE.

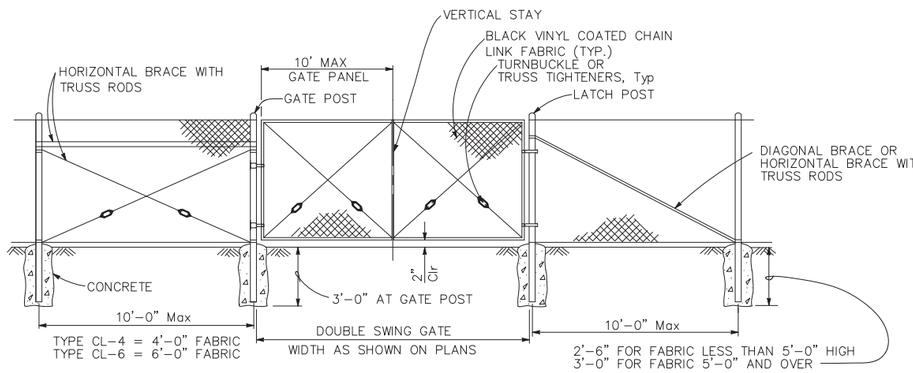

CHAIN LINK DOUBLE SWING GATE INSTALLATION

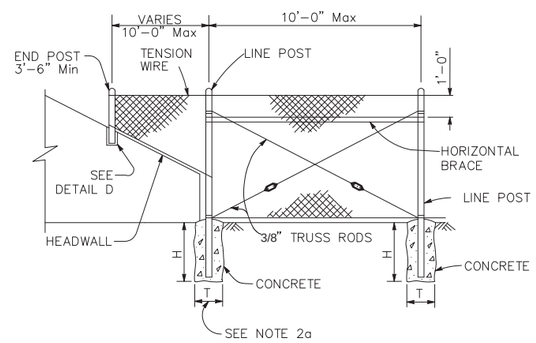

METHOD OF TYING FENCE TO HEADWALL

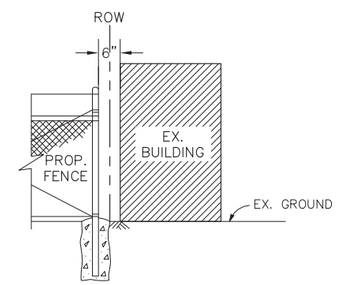

FENCE ADJACENT TO EXISTING BUILDING

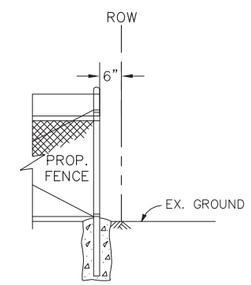

FENCE NOT ADJACENT TO EXISTING BUILDING

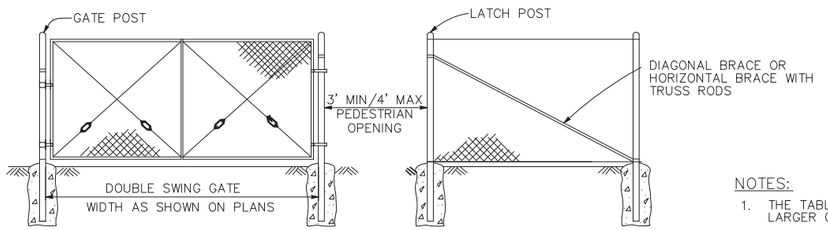

CHAIN LINK DOUBLE SWING GATE WITH PEDESTRIAN OPENING

NOTES:

1. THE TABLE BELOW SHOWS MINIMUM SIZED POSTS AND BRACES COMPLYING WITH THE SPECIFICATIONS. LARGER OR HEAVIER POST AND BRACE SIZES MAY BE USED UPON APPROVAL.
2. SECTIONS SHOWN IN THE TABLES MUST ALSO COMPLY WITH THE STRENGTH REQUIREMENTS AND OTHER PROVISIONS OF THE SPECIFICATIONS.
3. OTHER SECTIONS WHICH COMPLY WITH THE STRENGTH REQUIREMENTS AND OTHER PROVISIONS OF THE SPECIFICATIONS MAY BE USED UPON APPROVAL.
4. OPTIONS EXERCISED SHALL BE UNIFORM ON ANY ONE PROJECT.
5. OFFSET TO BE 2'-0" AT MONUMENT LOCATIONS, MEASURED AT RIGHT ANGLES TO R/W LINES. TAPER TO ACHIEVE OFFSET TO BE AT LEAST 20'-0" LONG.
6. ALL FENCING AND POST TO BE BLACK VINYL CLAD.

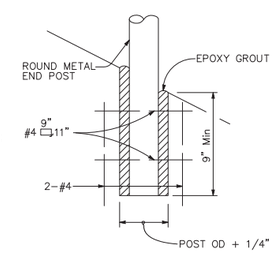

DETAIL D

GATE POST			
FENCE HEIGHT	GATE WIDTHS	ROUND OD PIPE	WEIGHT (lb/ft)
6'-0" AND LESS	UP THRU 6'-0"	2.875"	5.80
	OVER 6'-0" THRU 12'-0"	4.500"	10.80
	OVER 12'-0" THRU 18'-0"	5.563"	14.63
	OVER 18'-0" TO 24'-0" Max	6.625"	18.99
OVER 6'-0" TO 8'-0" Max	UP THRU 6'-0"	3.500"	7.58
	OVER 6'-0" THRU 12'-0"	5.563"	14.63
	OVER 12'-0" THRU 18'-0"	6.625"	18.99
	OVER 18'-0" TO 24'-0" Max	8.625"	28.58

ABOVE POST DIMENSIONS AND WEIGHTS ARE MINIMUMS. LARGER SIZES MAY BE USED UPON APPROVAL.

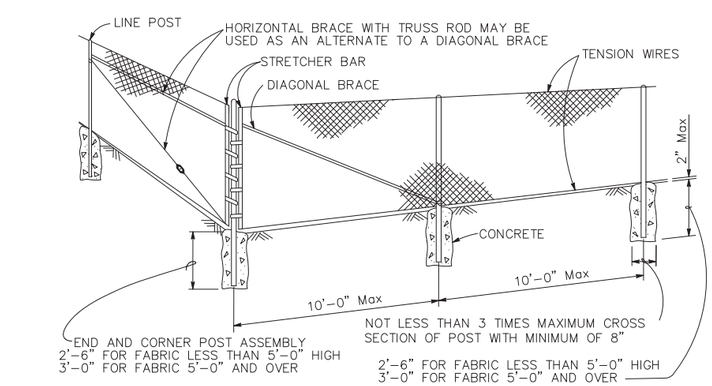

CORNER POST

TYPICAL MEMBER DIMENSIONS (See Notes)										
FENCE HEIGHT	LINE POSTS				END, LATCH AND CORNER POSTS		BRACES			
	ROUND OD PIPE	WEIGHT (lb/ft)	ROLL FORMED		ROUND OD PIPE	WEIGHT (lb/ft)	ROUND OD PIPE	WEIGHT (lb/ft)	ROLL FORMED	
			SECTION	WEIGHT (lb/ft)					SECTION	WEIGHT (lb/ft)
6'-0" AND LESS	1.900"	2.72	1.875" x 1.625"	1.85	2.375"	3.65	1.66"	2.27	1.625" x 1.25"	1.35
OVER 6'-0" TO 8'-0" Max	2.375"	3.65	2.25" x 1.70"	2.78	2.875"	5.80	1.66"	2.27	1.625" x 1.25"	1.35

REGISTERED PROFESSIONAL ENGINEER
ARIC TORREYSON
NO. 66068
EXP. 6-30-18
CIVIL
STATE OF CALIFORNIA

US Army Corps of Engineers
San Francisco District
1455 Market Street
San Francisco, CA 94103

TETRA TECH
17885 VON KARMAN AVE., SUITE 500
IRVINE, CA 92614
Phone: (949) 809-5000

Mark	Description	Date	Appr.

DESIGNED BY: AMT | CHECKED BY: YHC | DRAWN BY: AWG
DATE: 8-4-2016 | SHEET NO. 40 of 71 | DRAWING NO.
PREPARED UNDER THE DIRECTION OF JOHN C. MORROW LT. COLONEL, C.E., DISTRICT COMMANDER

SUBMITTED: Chief, Civil Design Section
APPROVAL RECOMMENDED: Chief, Engineering Branch
APPROVED: Chief, Engineering & Technical Services

SANTA CLARA COUNTY, CALIFORNIA
UPPER BERRYESSA CREEK FLOOD RISK MANAGEMENT PROJECT

FENCE AND GATE DETAILS

Sheet reference number C-303

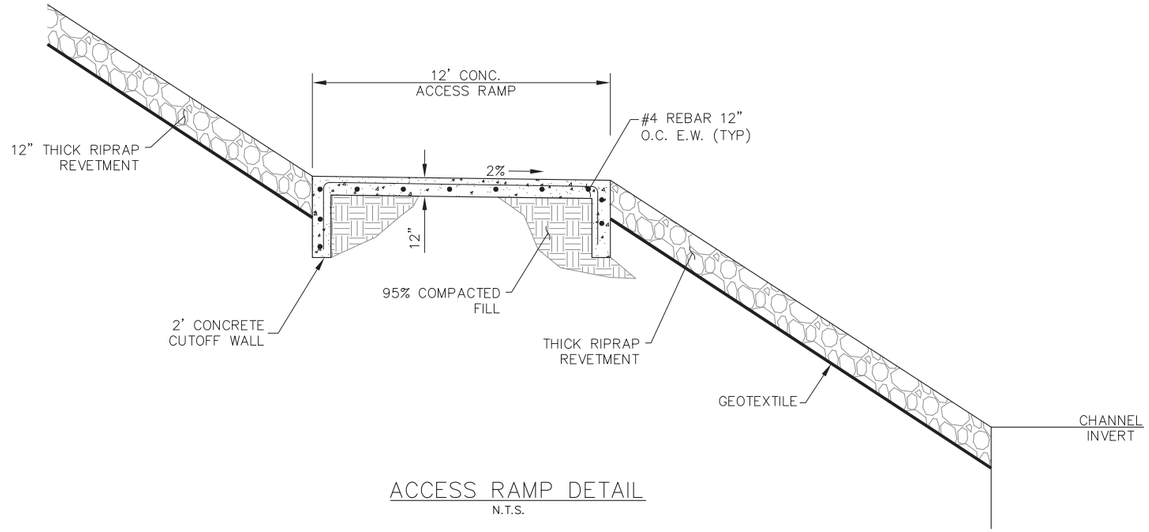

ACCESS RAMP DETAIL
N.T.S.

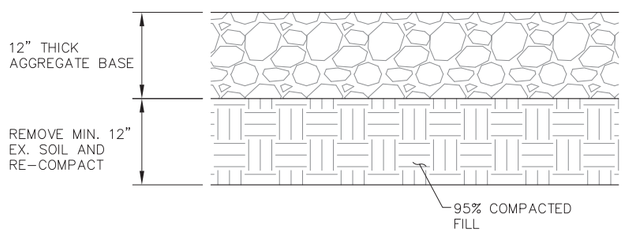

CRANE PAD SECTION
N.T.S.

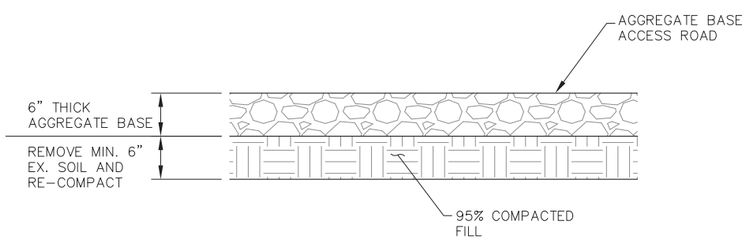

AB ACCESS ROAD SECTION

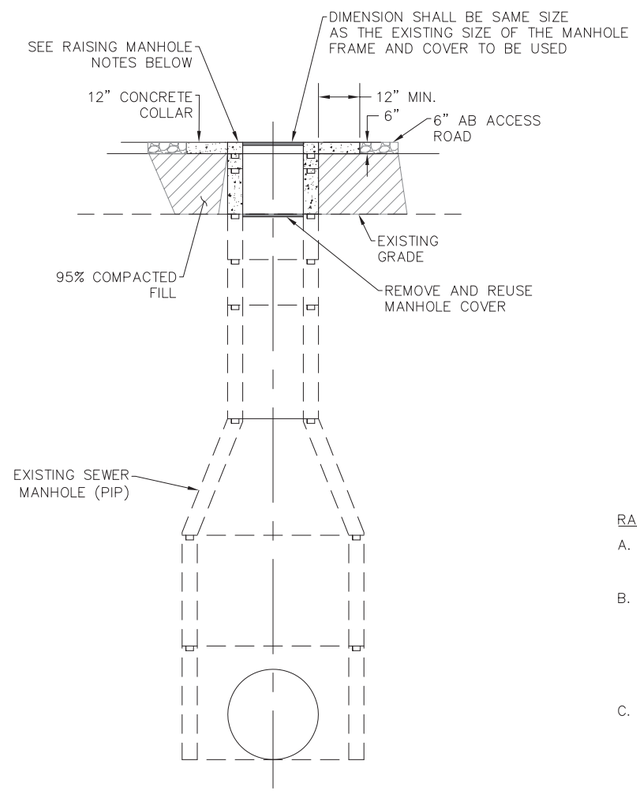

MANHOLE ADJUSTMENT DETAIL
N.T.S.

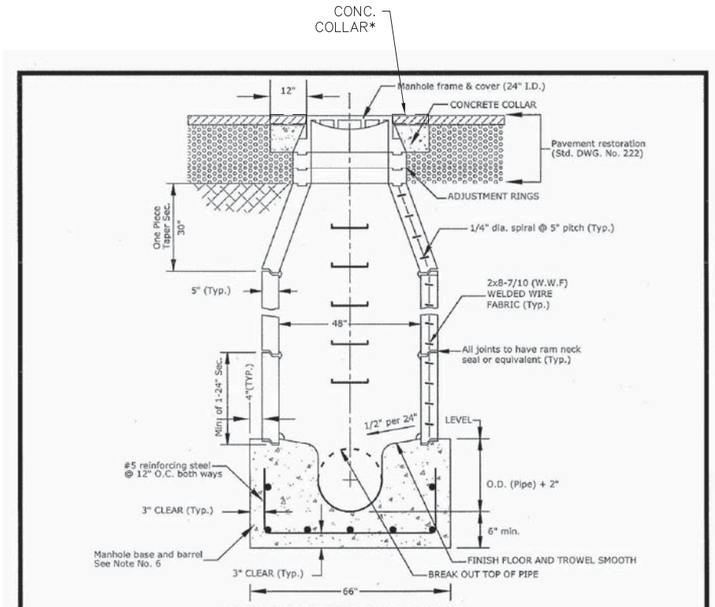

CONCENTRIC MANHOLE

NOTE:

1. P.C.C. shall be Class "A", construct per Section 1.04.14 of Standard Specifications (Cement Type V).
2. Where manhole is constructed in easement or other non street location, manhole frame and cover shall be 6" above ground elevation.
3. Eccentric manhole is preferred over concentric manhole.
4. All manholes are to be constructed watertight.
5. For sanitary sewer manhole, steps shall be placed 13" O.C. from bottom to top. Copolymer polypropylene plastic coated 1/2" grade 60 steel reinforcement by MA Industries PS2-PF or approved equal shall be used. Steps are not to be installed in storm drain manhole.
6. Precast manhole base and barrel shall conform to State Specification Section 70 or approved equal. All castings for manholes, such as rings and covers, shall possess a tensile strength of not less than 16,000 psi.

NOT TO SCALE

CITY OF MILPITAS, ENGINEERING DIVISION

REVISION	DATE
1	1958
2	2001
3	2010

SANITARY AND STORM MANHOLE

APPROVED BY: 3
PUBLIC WORKS DIRECTOR / CITY ENGINEER RCE No. 40283

STANDARD DRAWING
NO. 230
DATE : 6/15/10
SHEET 1 OF 3

NOTE (*) CONCRETE COLLAR TO BE EXTENDED TO FINISH GRADE OF AB ACCESS ROAD.

RAISING EXISTING MANHOLES NOTES

A. CONCRETE MANHOLES TO BE RAISED LESS THAN 3" MAY BE RAISED BY APPLYING MORTAR (2.5:1 SAND TO CEMENT RATIO) TO THE TOP OF THE EXISTING MANHOLE, PROVIDED THE TOTAL HEIGHT OF MORTAR, EXISTING AND NEWLY APPLIED, DOES NOT EXCEED 3".

B. WHERE THE CONCRETE MANHOLE IS TO BE RAISED 3" OR MORE, OR WHERE THE TOTAL HEIGHT OF MORTAR, EXISTING AND NEWLY APPLIED, WOULD EXCEED 3", GRADE RINGS SHALL BE UTILIZED. MORTAR MAY BE USED FOR FINAL ADJUSTMENT, BUT NOT MORE THAN 3" IN HEIGHT. WHERE RAISING THE MANHOLE WOULD RESULT IN THE UPPER SEGMENT OF THE SHAFT BEING MORE THAN 30" IN HEIGHT, REMOVE THE REDUCER AND THE UPPER SEGMENT OF THE SHAFT, INSTALL ADDITIONAL RINGS OR PIPE TO THE LOWER SEGMENT OF THE SHAFT, AND REINSTALL THE REDUCER AND GRADE RINGS AS REQUIRED.

C. ALL OTHER ADJSUTMENTS TO CONFORM TO CITY OF MILPITAS STD PLAN NO. 230.

REGISTERED PROFESSIONAL ENGINEER
ARIC TORREYSON
NO. 66068
EXP. 6-30-18
CIVIL
STATE OF CALIFORNIA

US Army Corps of Engineers
San Francisco District
1455 Market Street
San Francisco, CA 94103

TETRA TECH
17885 VON KARMAN AVE.,
SUITE 500
IRVINE, CA 92614
Phone: (949) 809-5000

Mark	Description	Date	Appr.

DESIGNED BY: AMT
CHECKED BY: YHC
DRAWN BY: AWG
DATE: 8-4-2016
SHEET NO. 41 of 71
DRAWING NO.

PREPARED UNDER THE DIRECTION OF
JOHN C. MORROW
LT. COLONEL, C.E., DISTRICT COMMANDER

SUBMITTED:
Chief, Civil Design Section
APPROVAL RECOMMENDED:
Chief, Engineering Branch
APPROVED:
Chief, Engineering & Technical Services

SANTA CLARA COUNTY, CALIFORNIA
UPPER BERRYESSA CREEK FLOOD RISK MANAGEMENT PROJECT

MISC. DETAILS

Sheet reference number
C-304

CONFORMED DRAWING

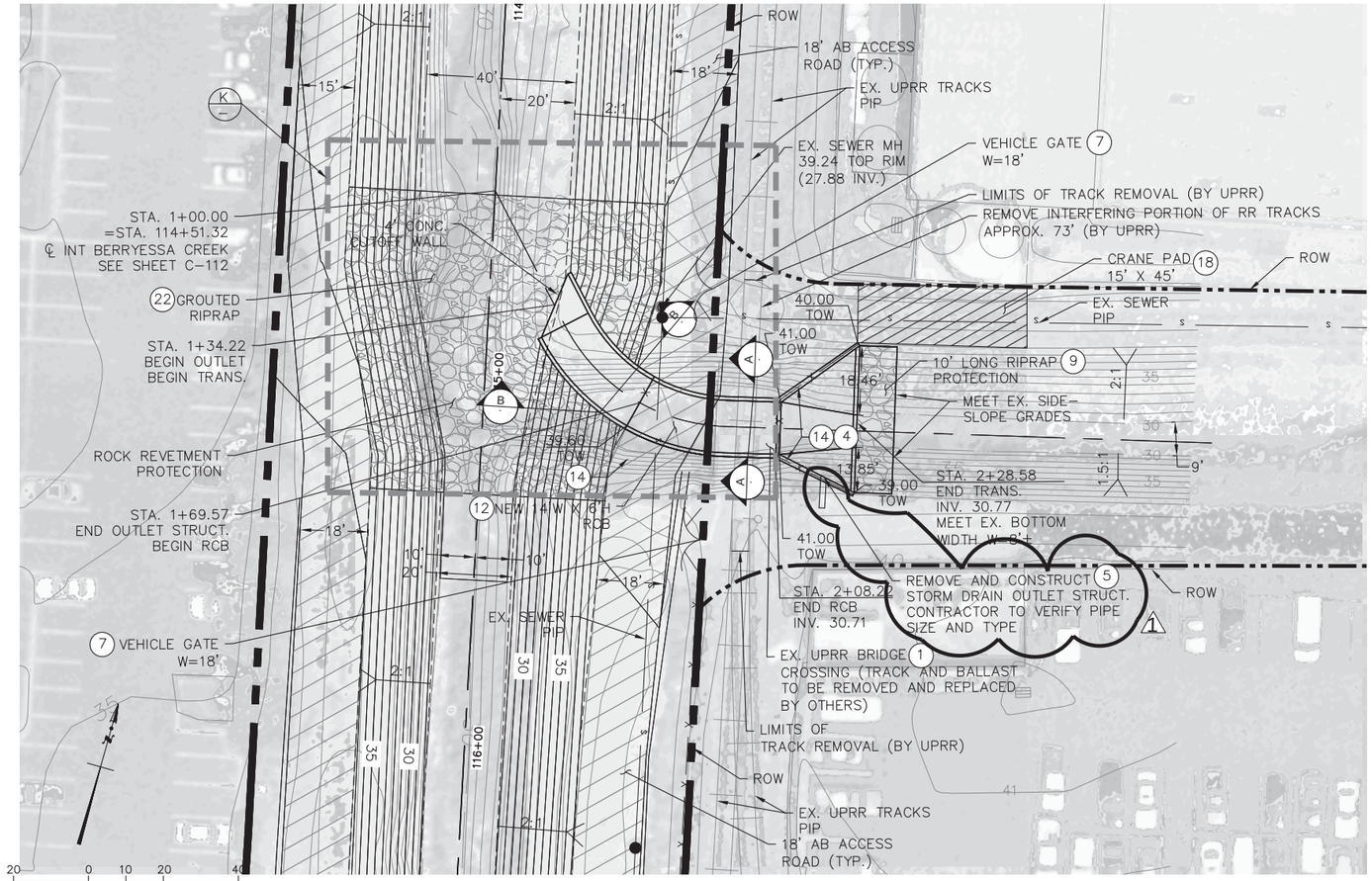

DETAIL I – PIEDMONT CREEK CONFLUENCE

CONSTRUCTION NOTES

(1) REMOVE EXISTING FEATURES TO CONSTRUCT IMPROVEMENTS AS SHOWN

(4) CONSTRUCT CONCRETE TRANSITION STRUCTURE PER DETAILS AS SHOWN ON SHEETS S-103

(7) REMOVE EXISTING AND CONSTRUCT NEW DOUBLE SWING GATE PER DETAIL ON SHEET C-303

(9) CONSTRUCT 24" THICK RIPRAP REVETMENT PER DETAIL ON SHEET C-302

(12) CONSTRUCT 14'W X 6'H RCB PER DETAILS ON SHEET S-102

(14) CONSTRUCT 6' HIGH CHAIN LINK FENCE PER DETAIL ON SHEET C-303 △1

(18) CONSTRUCTION CRANE PAD PER DETAILS ON SHEET C-304

(22) CONSTRUCT 24" THICK GROUTED RIPRAP REVETMENT PER DETAIL ON SHEET C-302

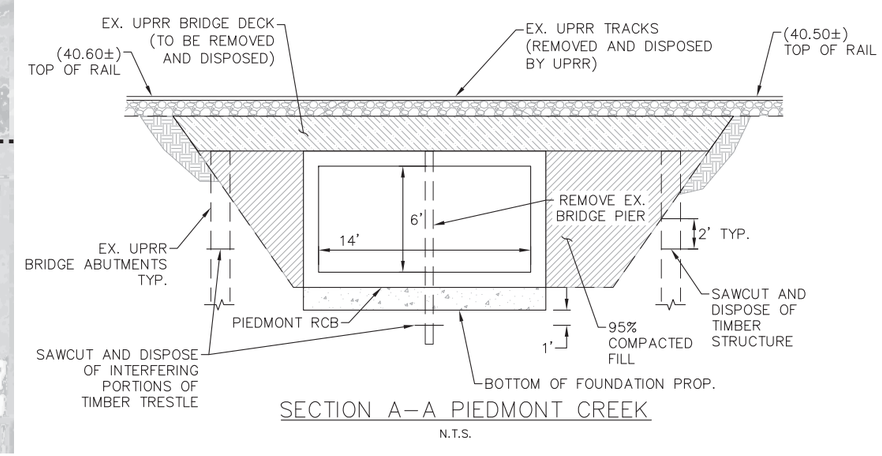

SECTION A–A PIEDMONT CREEK

N.T.S.

EX. RAILROAD NOTES
1. TRACK AND BALLAST REPLACEMENT BY UPRR.
2. REVIEW ENVIRONMENTAL REQUIREMENTS FOR DISPOSAL OF TIMBER STRUCTURE AS OFTEN OLD BRIDGES USED CREOSOTE OR OTHER ENVIRONMENTALLY SENSITIVE MATERIALS WHICH REQUIRE SPECIAL DISPOSAL METHODS. SEE SPECIFICATIONS SECTION 34 11 00.

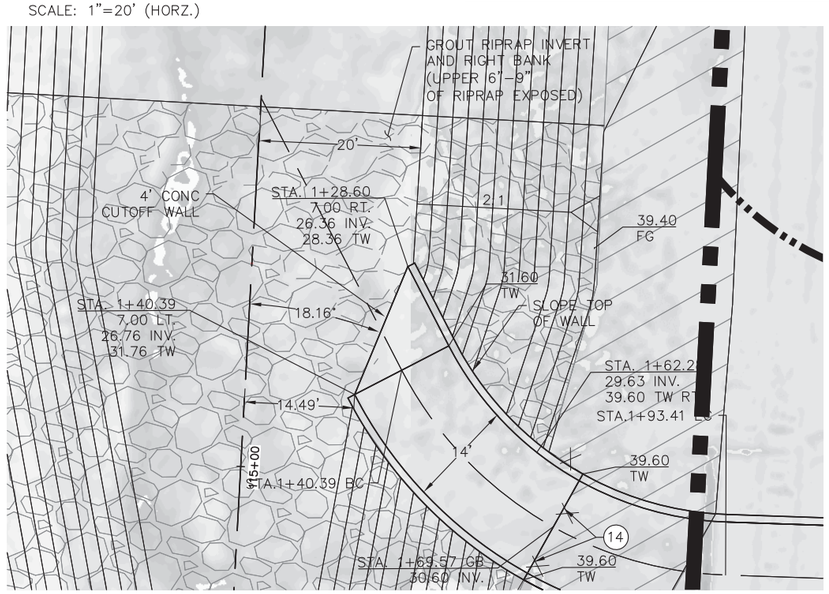

DETAIL K – PIEDMONT CREEK DETAIL

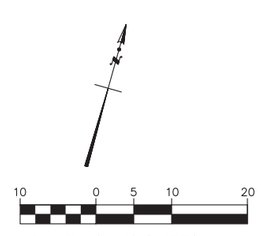

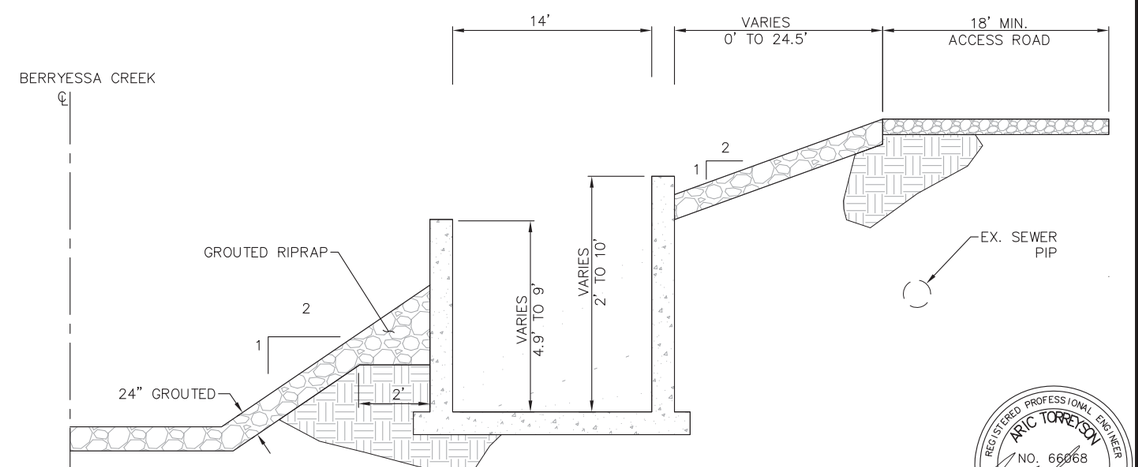

BERRYESSA CREEK / PIEDMONT CREEK SECTION B–B

REGISTERED PROFESSIONAL ENGINEER ARIC TORRESON NO. 66068 EXP. 6-30-18 CIVIL STATE OF CALIFORNIA

US Army Corps of Engineers
San Francisco District
1455 Market Street
San Francisco, CA 94103

TETRA TECH
17885 VON KARMAN AVE., SUITE 500
IRVINE, CA 92614
Phone: (949) 809-5000

Mark	Description	Date	Appr.
△1	ADD CONST. NOTE 14 & SD OUTLET STRUCT.	7/6/16	

DESIGNED BY: AMT | DRAWN BY: AWG
CHECKED BY: YHC | DRAWING NO.
DATE: 8-4-2016 | SHEET NO. 42 of 71

PREPARED UNDER THE DIRECTION OF JOHN C. MORROW LT. COLONEL, C.E., DISTRICT COMMANDER

SUBMITTED: Chief, Civil Design Section APPROVAL RECOMMENDED:
Chief, Engineering Branch APPROVED:
Chief, Engineering & Technical Services

SANTA CLARA COUNTY, CALIFORNIA
UPPER BERRYESSA CREEK FLOOD RISK MANAGEMENT PROJECT

PIEDMONT CREEK JUNCTION CHANNEL IMPROVEMENTS

Sheet reference number C-305

P:\Watt\T31331 Berryessa Design SCVWD\11 Design\01 Final Design\Sheets\ C-305 Piedmont.dwg 02 Aug 2016 - 5:46pm

CONFORMED DRAWING

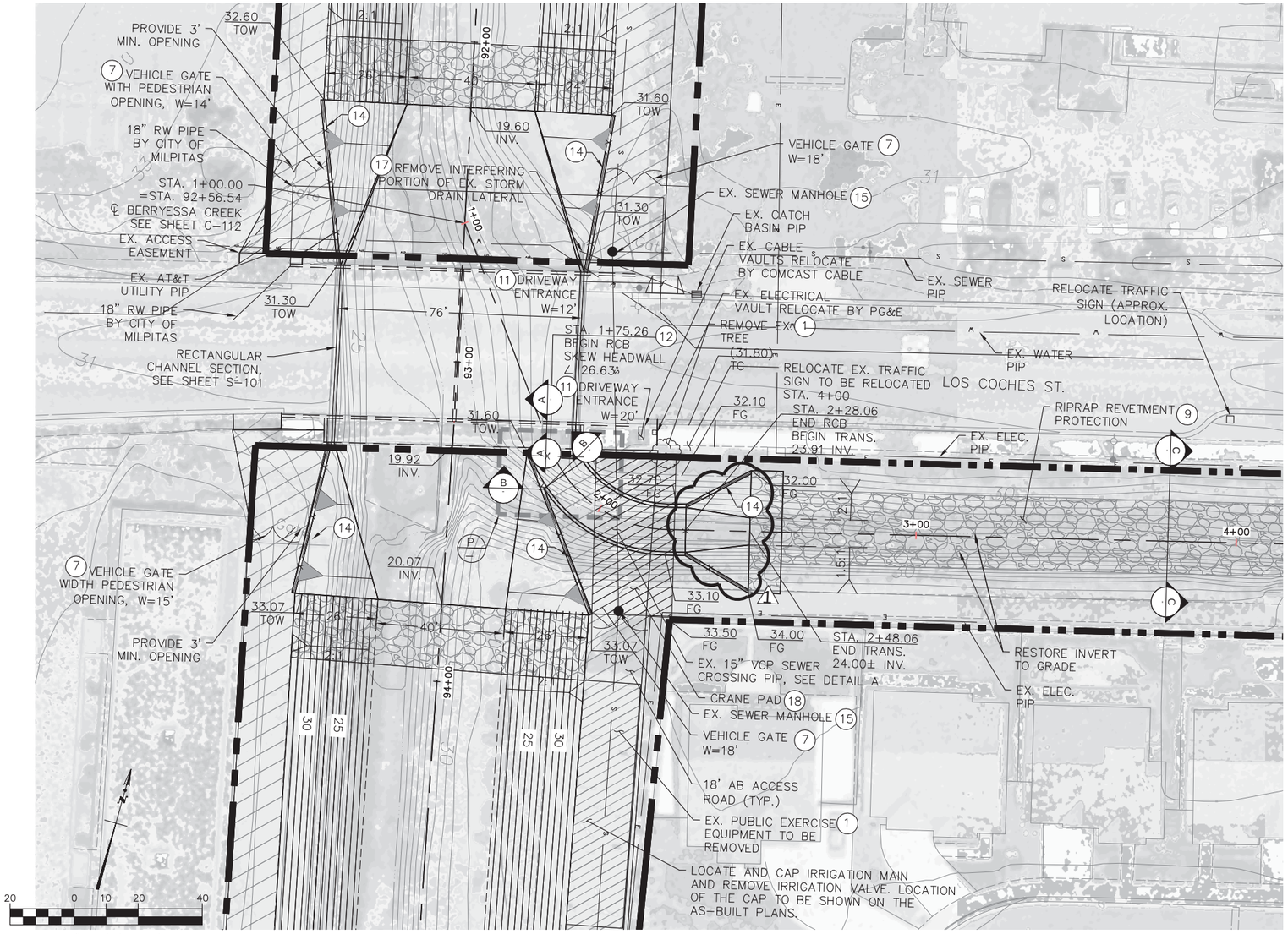

SCALE: 1"=20' (HORZ.)

DETAIL J – LOS COCHES STORM DRAIN

CONSTRUCTION NOTES

1. REMOVE EXISTING FEATURES TO CONSTRUCT IMPROVEMENTS AS SHOWN
7. REMOVE EXISTING AND CONSTRUCT NEW DOUBLE SWING GATE PER DETAIL ON SHEET C-303
9. CONSTRUCT 24" THICK RIPRAP REVETMENT PER DETAIL ON SHEET C-302
11. CONSTRUCT DRIVEWAY ENTRANCE PER CITY OF MILPITAS STD PLAN 432 AS SHOWN ON SHEET C-302
12. CONSTRUCT 14'W X 6'H RCB PER DETAILS ON SHEET S-102
14. CONSTRUCT 6' HIGH CHAIN LINK FENCE PER DETAIL ON SHEET C-303
15. ADJUST EX. SEWER MANHOLE TO FINISH GRADE AS NECESSARY PER DETAIL ON SHEET C-304
17. REMOVE EXISTING AND CONSTRUCT NEW STORM DRAIN OUTLET TYPE 2 AS SHOWN ON SHEET C-301
18. CONSTRUCTION CRANE PAD PER DETAILS ON SHEET C-304

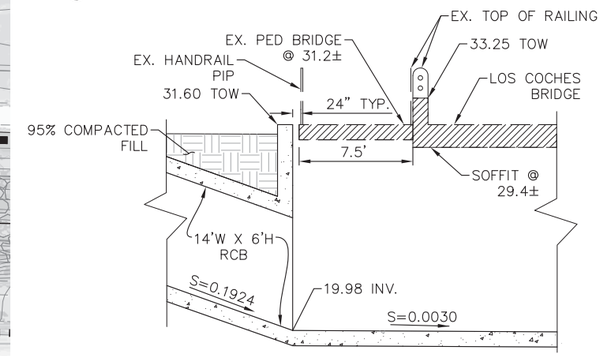

BERRYESSA CREEK / LOS COCHES SD LATERAL SECTION A–A

N.T.S

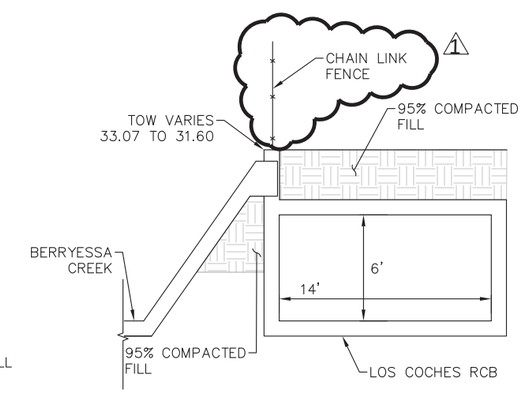

BERRYESSA CREEK / LOS COCHES SD LATERAL SECTION B–B

N.T.S

CONSTRUCTION ADJACENT TO SUBDIVISION

CONTRACTOR TO COORDINATE WITH THE ADJACENT SUBDIVISION HOA PRIOR TO REMOVAL OF EX. EXERCISE EQUIPMENT, IRRIGATION LINES, PEDESTRIAN GATE.

BRIDGE NOTES

WORKING AT EXISTING AND PROPOSED BRIDGES ENTAIL LOW HEAD CLEARANCES AND CONTRACTOR SHALL PLAN ACCORDINLY.

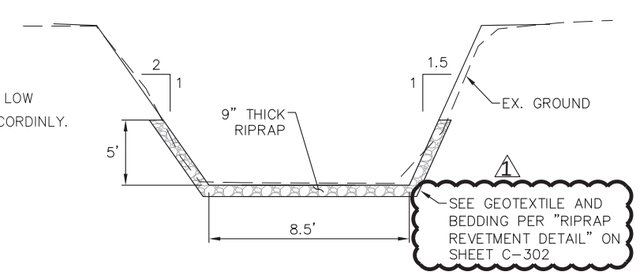

SECTION C–C LOS COCHES CHANNEL

N.T.S

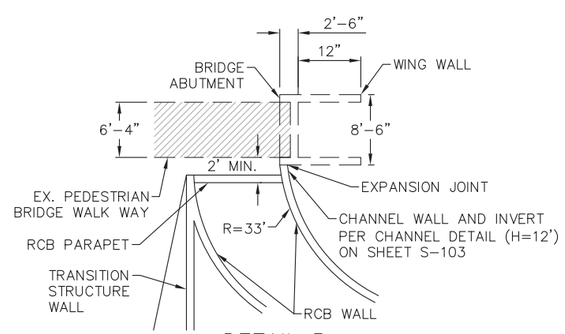

DETAIL P

N.T.S

US Army Corps of Engineers
San Francisco District
1455 Market Street
San Francisco, CA 94103

TETRA TECH
17885 VON KARMAN AVE., SUITE 500
IRVINE, CA 92614
Phone: (949) 809-5000

Mark	Description	Date	Appr.
1	ADD CHAIN LINK FENCE	7/6/16	

DESIGNED BY: AMT
CHECKED BY: YHC
DRAWN BY: AWG
DATE: 8-4-2016
SHEET NO. 43 of 71
DRAWING NO.
PREPARED UNDER THE DIRECTION OF JOHN C. MORROW LT. COLONEL, C.E., DISTRICT COMMANDER

SUBMITTED:
Chief, Civil Design Section
APPROVAL RECOMMENDED:
Chief, Engineering Branch
APPROVED:
Chief, Engineering & Technical Services

SANTA CLARA COUNTY, CALIFORNIA
UPPER BERRYESSA CREEK FLOOD RISK MANAGEMENT PROJECT

LOS COCHES CREEK JUNCTION CHANNEL IMPROVEMENTS

Sheet reference number C–306

REGISTERED PROFESSIONAL ENGINEER ARIC TORREYSON NO. 66068 EXP. 6-30-18 CIVIL STATE OF CALIFORNIA

P:\Wat\T31331 Berryessa Design SCVWD\11 Design\01 Final Design\Sheets\ C-306 Los Coches.dwg 02 Aug 2016 - 5:52pm

CONFORMED DRAWING

CONSTRUCTION NOTES

7. REMOVE EXISTING AND CONSTRUCT NEW DOUBLE SWING GATE PER DETAIL ON SHEET C–303
11. CONSTRUCT DRIVEWAY ENTRANCE PER CITY OF MILPITAS STD PLAN 432 AS SHOWN ON SHEET C–302
14. CONSTRUCT 6' HIGH CHAIN LINK FENCE PER DETAIL ON SHEET C–303
18. CONSTRUCTION CRANE PAD PER DETAILS ON SHEET C–304
22. CONSTRUCT 24" THICK GROUTED RIPRAP REVETMENT PER DETAIL ON SHEET C–302

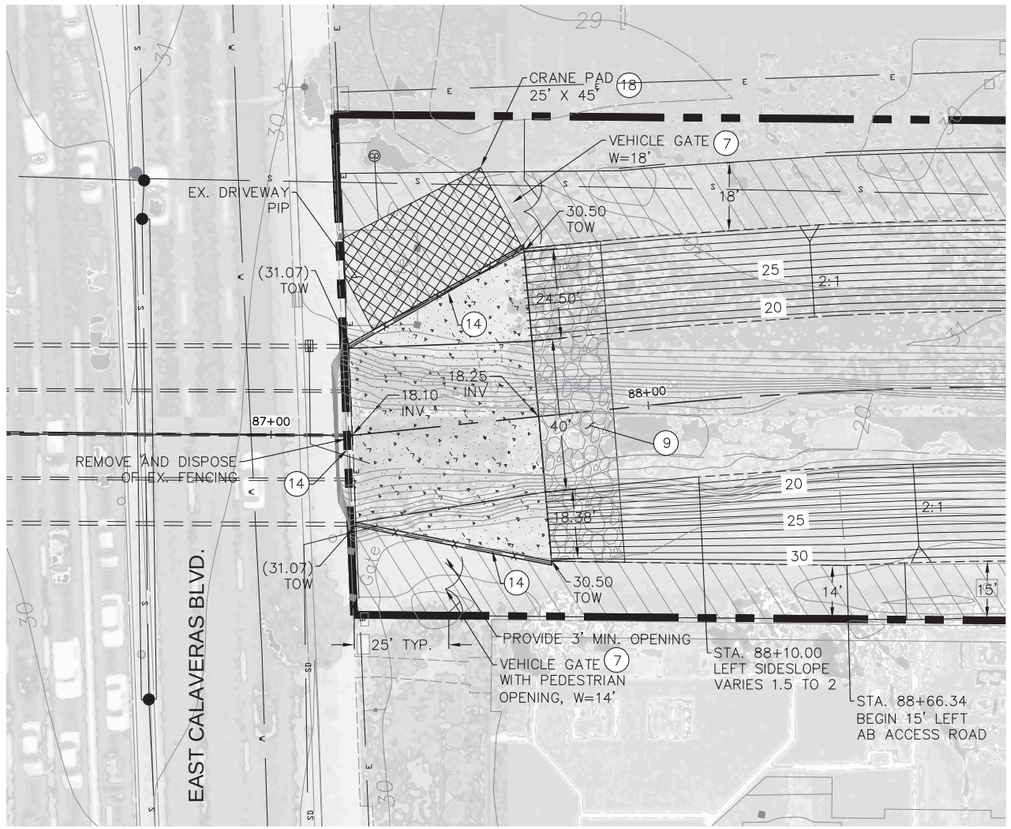

DETAIL A
EAST CALAVERAS BLVD. DETAIL

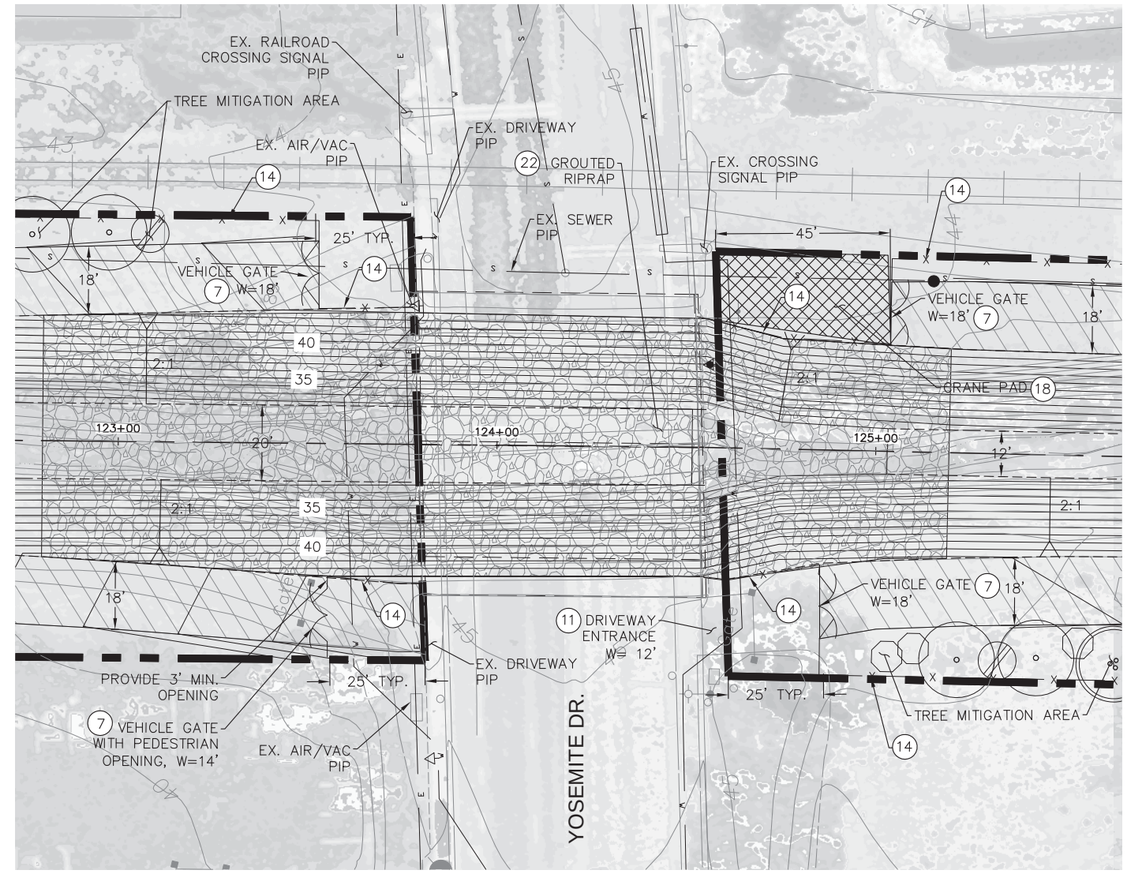

DETAIL D
YOSEMITE DR. DETAIL 1

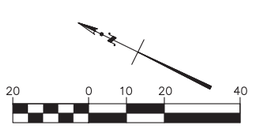

REGISTERED PROFESSIONAL ENGINEER ARIC TORREYSON NO. 66068 EXP. 6-30-18 CIVIL STATE OF CALIFORNIA

US Army Corps of Engineers
San Francisco District
1455 Market Street
San Francisco, CA 94103

TETRA TECH
17885 VON KARMAN AVE., SUITE 500
IRVINE, CA 92614
Phone: (949) 809-5000

Mark	Description	Date	Appr.
1	CHAIN LINK FENCE AS SHOWN	7/6/16	

DESIGNED BY: AMT
CHECKED BY: YHC
DRAWN BY: AWG
DATE: 8–4–2016
SHEET NO. 44 of 71
DRAWING NO.
PREPARED UNDER THE DIRECTION OF JOHN C. MORROW LT. COLONEL, C.E., DISTRICT COMMANDER

SUBMITTED:
Chief, Civil Design Section
APPROVAL RECOMMENDED:
Chief, Engineering Branch
APPROVED:
Chief, Engineering & Technical Services

SANTA CLARA COUNTY, CALIFORNIA
UPPER BERRYESSA CREEK FLOOD RISK MANAGEMENT PROJECT
EAST CALAVERAS BLVD. AND YOSEMITE DR. DETAIL

Sheet reference number
C–307

CONFORMED DRAWING

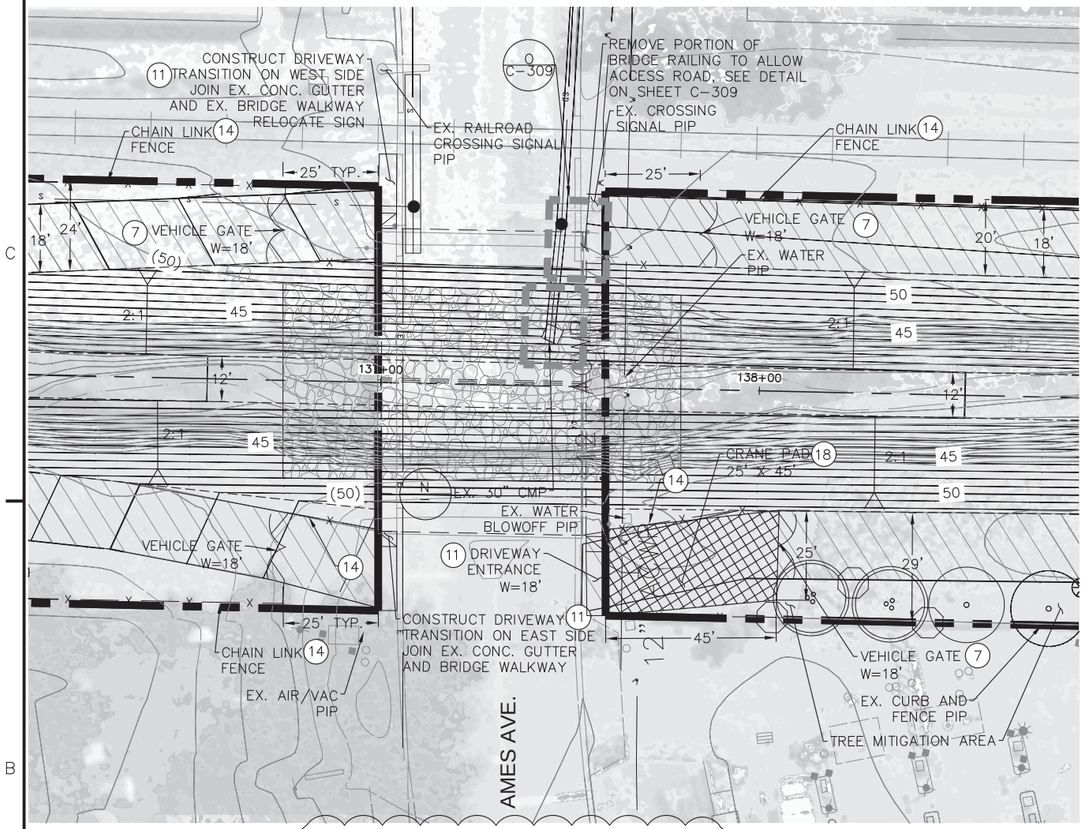

1 DETAIL E – AMES AVE. DETAIL

CONSTRUCTION NOTES

(7) REMOVE EXISTING AND CONSTRUCT NEW DOUBLE SWING GATE PER DETAIL ON SHEET C-303

(11) CONSTRUCT DRIVEWAY ENTRANCE PER CITY OF MILPITAS STD PLAN 432 AS SHOWN ON SHEET C-302

(14) CONSTRUCT 6' HIGH CHAIN LINK FENCE PER DETAIL ON SHEET C-303

(18) CONSTRUCTION CRANE PAD PER DETAILS ON SHEET C-304

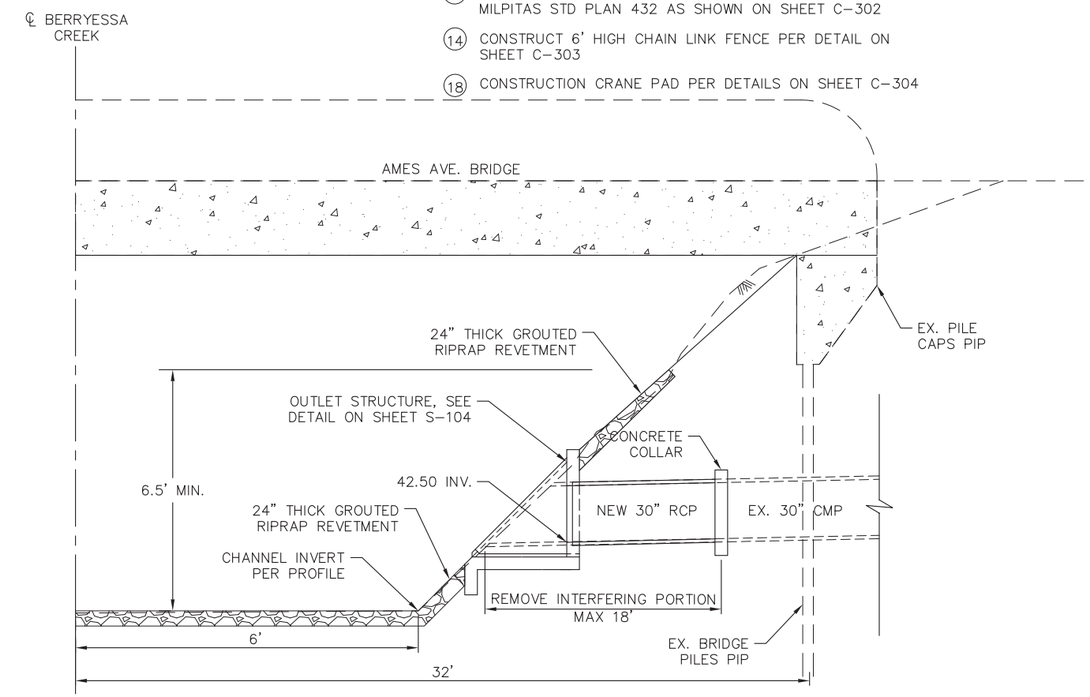

DETAIL N – AMES AVE. OUTLET STRUCTURE DETAIL

N.T.S

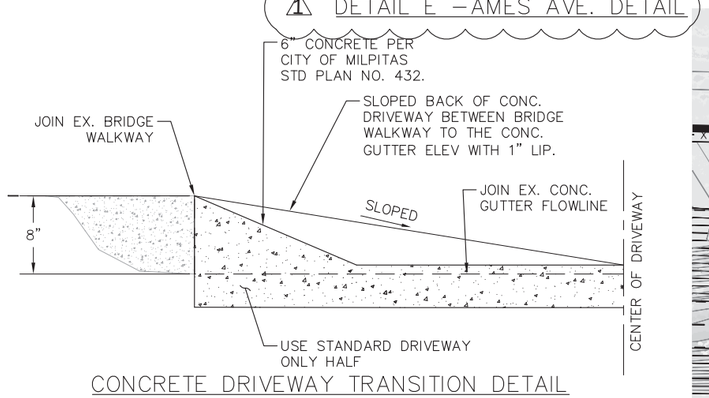

CONCRETE DRIVEWAY TRANSITION DETAIL
SECTION VIEW

NTS

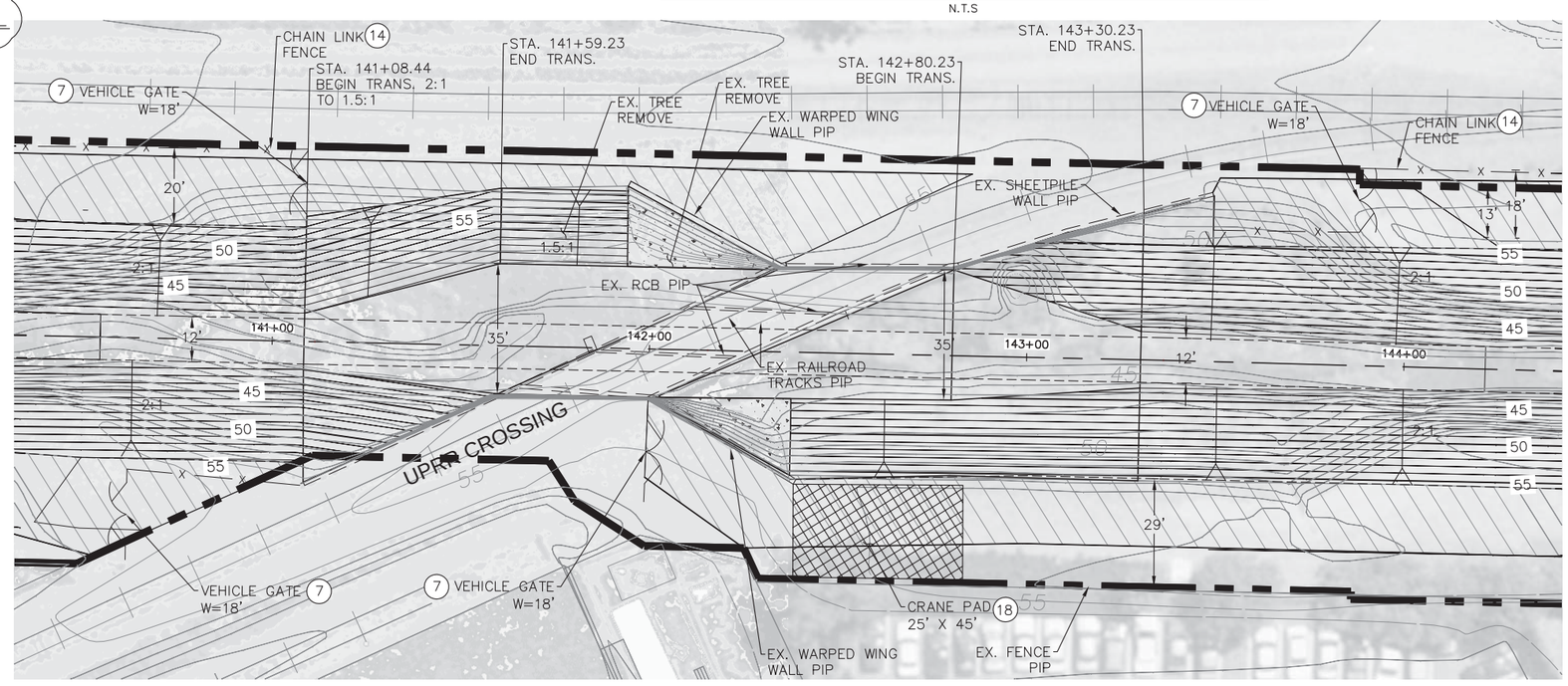

DETAIL F – UPRR CROSSING DETAIL

REGISTERED PROFESSIONAL ENGINEER ARIC TORREYSON NO. 66068 EXP. 6-30-16 CIVIL STATE OF CALIFORNIA

20 0 10 20 40

P:\Water\T31331 Berryessa Design SCVWD\11 Design\01 Final Design\Sheets\ C-308 AMES AVE.dwg 02 Aug 2016 - 6:02pm

US Army Corps of Engineers
San Francisco District
1455 Market Street
San Francisco, CA 94103

TETRA TECH
17885 VON KARMAN AVE., SUITE 500
IRVINE, CA 92614
Phone: (949) 809-5000

Mark	Description	Date	Appr.
1	CHAIN LINK FENCE AS SHOWN	7/6/16	

DESIGNED BY: AMT | CHECKED BY: YHC | DRAWN BY: AWG
DATE: 8-4-2016 | SHEET NO. 45 of 71 | DRAWING NO.
SUBMITTED: Chief, Civil Design Section APPROVAL RECOMMENDED:
Chief, Engineering Branch APPROVED:
PREPARED UNDER THE DIRECTION OF JOHN C. MORROW LT. COLONEL, C.E., DISTRICT COMMANDER
Chief, Engineering & Technical Services

SANTA CLARA COUNTY, CALIFORNIA
UPPER BERRYESSA CREEK FLOOD RISK MANAGEMENT PROJECT
AMES AVE. AND UPRR CROSSING DETAIL

Sheet reference number
C-308

CONFORMED DRAWING

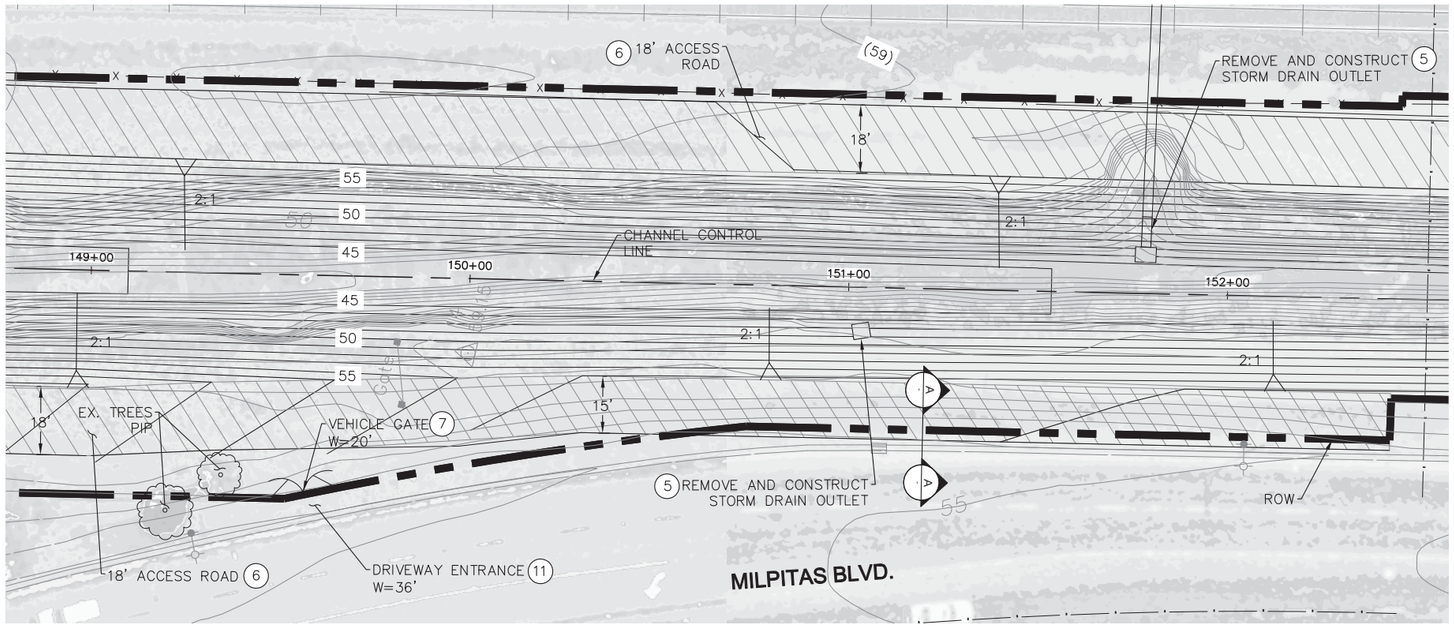

DETAIL G– MILPITAS BLVD.

CONSTRUCTION NOTES

5. REMOVE EXISTING AND CONSTRUCT NEW STORM DRAIN OUTLET AS SHOWN ON SHEET C–301
6. CONSTRUCT 6" AB ACCESS ROAD AS SHOWN ON THE PROFILE AND CROSS SECTIONS
7. REMOVE EXISTING AND CONSTRUCT NEW DOUBLE SWING GATE PER DETAIL ON SHEET C–303
11. CONSTRUCT DRIVEWAY ENTRANCE PER CITY OF MILPITAS STD PLAN 432 AS SHOWN ON SHEET C–302

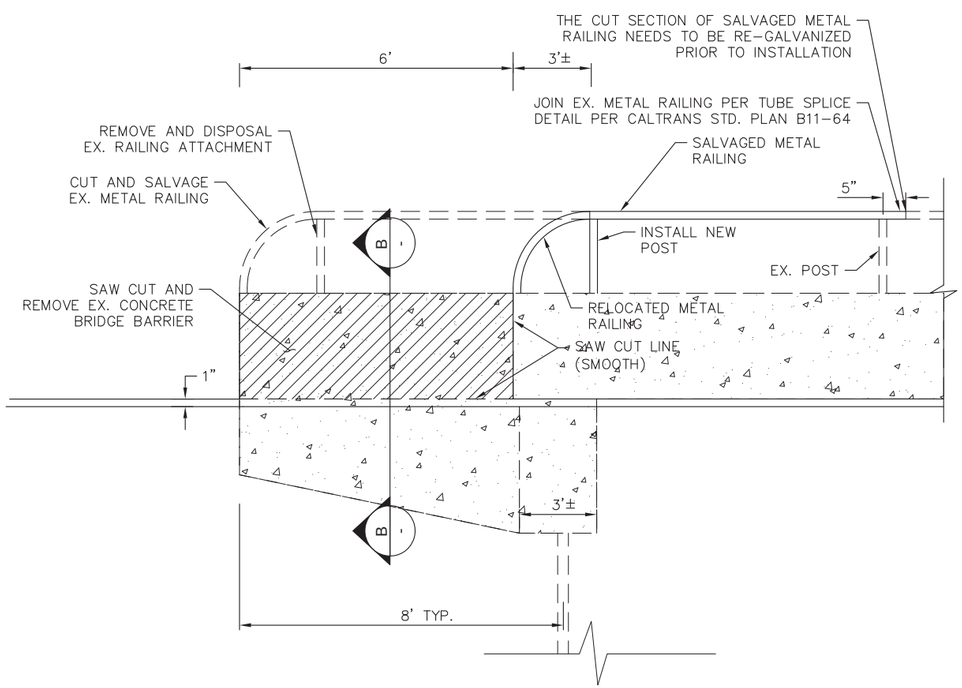

DETAIL O – AMES BRIDGE PARTIAL REMOVAL DETAIL

NTS

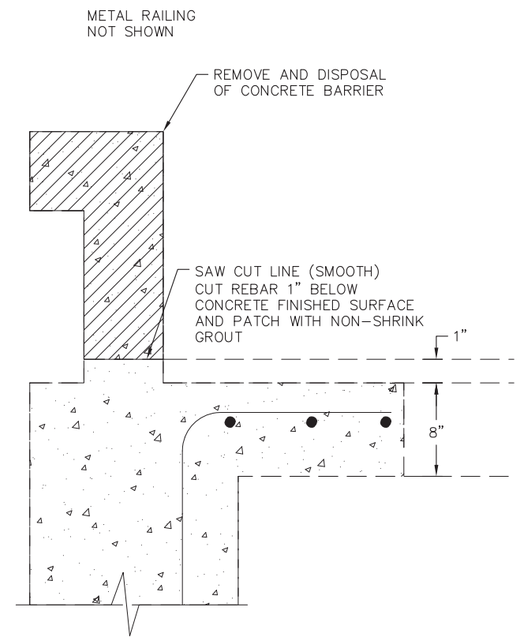

SECTION B–B CONC. BARRIER REMOVAL DETAIL

NTS

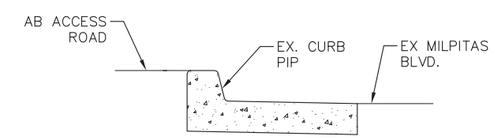

SECTION A–A

NTS

US Army Corps of Engineers
San Francisco District
1455 Market Street
San Francisco, CA 94103

TETRA TECH
1788S VON KARMAN AVE.,
SUITE 500
IRVINE, CA 92614
Phone: (949) 809-5000

Mark	Description	Date	Appr.

DESIGNED BY: AMT
CHECKED BY: YHC
DRAWN BY: AWG
DATE: 8–4–2016
SHEET NO. 46 of 71
DRAWING NO.

PREPARED UNDER THE DIRECTION OF
JOHN C. MORROW
LT. COLONEL, C.E., DISTRICT COMMANDER

SUBMITTED:
Chief, Civil Design Section
APPROVAL RECOMMENDED:
Chief, Engineering Branch
APPROVED:
Chief, Engineering & Technical Services

SANTA CLARA COUNTY, CALIFORNIA
UPPER BERRYESSA CREEK FLOOD RISK MANAGEMENT PROJECT
MILPITAS BLVD.
DETAIL

REGISTERED PROFESSIONAL ENGINEER
ARIC TORREYSON
NO. 66068
EXP. 6–30–18
CIVIL
STATE OF CALIFORNIA

Sheet reference number
C–309

CONFORMED DRAWING

GENERAL STRUCTURAL NOTES

1. THE CONTRACTOR SHALL VERIFY ALL DIMENSIONS, ELEVATIONS AND SITE CONDITIONS BEFORE STARTING WORK AND SHALL NOTIFY THE ENGINEER IMMEDIATELY OF ANY DISCREPANCIES. ANY OMISSION OR CONFLICT BETWEEN THE VARIOUS ELEMENTS OF THE CONTRACT DRAWINGS AND/OR SPECIFICATIONS SHALL BE CLARIFIED BY THE ENGINEER BEFORE PROCEEDING WITH WORK.
2. NOTES AND DETAILS ON THE DRAWINGS SHALL TAKE PRECEDENCE OVER GENERAL STRUCTURAL NOTES AND TYPICAL DETAILS ON THIS SHEET IN CASE OF CONFLICTS.
3. ALL CONSTRUCTION AND QUALITY OF MATERIALS SHALL CONFORM TO THE REQUIREMENTS OF THE PROJECT SPECIFICATIONS.
4. WHERE CONSTRUCTION DETAILS ARE NOT SHOWN OR NOTED FOR ANY PART OF THE WORK, SUCH DETAILS SHALL BE THE SAME AS FOR SIMILAR WORK SHOWN ON THE DRAWINGS.
5. THE CONTRACTOR SHALL TAKE ALL NECESSARY PRECAUTIONS TO LOCATE AND PROTECT UNDERGROUND OR CONCEALED CONDUITS, PLUMBING OR OTHER UTILITIES.
6. THE STRUCTURE IS DESIGNED AS A STABLE UNIT AFTER ALL STRUCTURAL COMPONENTS ARE IN PLACE AND PROPERLY CONNECTED. THE CONTRACTOR SHALL BE RESPONSIBLE FOR PROVIDING TEMPORARY BRACING, AS REQUIRED, TO ENSURE THE VERTICAL AND LATERAL STABILITY OF THE ENTIRE STRUCTURE DURING CONSTRUCTION.
7. THE CONTRACTOR SHALL NOT SCALE DIMENSIONS FROM THE DRAWINGS. THE STATIONING SHOWN ON THE SHEETS ARE ALONG THE CENTER LINE OR CONTROL LINE OF THE STRUCTURES.

REINFORCED CONCRETE

1. CONCRETE (UNIT WT. = 150 PCF): f'c = 4,000 PSI @ 28 DAYS.
2. PORTLAND CEMENT SHALL CONFORM TO ASTM C150 TYPE II. STRUCTURAL CONCRETE AGGREGATE SHALL CONFORM TO ASTM C33-93 FOR STANDARD WEIGHT.
3. ADMIXTURES MAY BE USED WITH PRIOR APPROVAL OF THE ENGINEER.
4. CONCRETE SHALL NOT COME IN CONTACT WITH ALUMINUM.
5. TIE ALL INSERTS, ANCHOR BOLTS OR OTHER EMBEDDED ELEMENTS SECURELY IN PLACE PRIOR TO PLACEMENT OF CONCRETE.
6. MECHANICALLY VIBRATE ALL CONCRETE WHEN PLACED.
7. CHAMFER EXPOSED EDGES OF CONCRETE $\frac{3}{4}$", UNLESS OTHERWISE NOTED.

REINFORCING STEEL

1. ALL REINFORCING STEEL SHALL CONFORM TO ASTM A615 GRADE 60.
2. REINFORCING STEEL SHALL BE FABRICATED AND PLACED IN ACCORDANCE WITH THE CURRENT EDITIONS OF THE BUILDING CODE REQUIREMENTS FOR REINFORCED CONCRETE (ACI 318) & THE STANDARD MANUAL (ACI 315).
3. BAR SUPPORTS AND SPACERS FOR REBAR SHALL BE PROVIDED IN ACCORDANCE WITH ACI 315.
4. WHERE LAPPED SPLICES IN REINFORCING OCCUR, THE MINIMUM LAP SHALL BE MADE IN ACCORDANCE WITH TABLE 1 HEREON, UNLESS NOTED OTHERWISE.
5. CONCRETE COVER FOR REINFORCING SHALL BE AS FOLLOWS UNLESS NOTED OTHERWISE:
   A. CONCRETE CAST AGAINST AND PERMANENTLY EXPOSED TO EARTH: 4"
   B. FORMED SURFACES EXPOSED TO EARTH OR WEATHER: 2"
6. ALL HORIZONTAL REINFORCING IN TURNDOWN, WALLS, AND BEAMS SHALL BE CONTINUOUS AROUND CORNERS OR HAVE CORNER BARS OF THE SAME SIZE AND SPACING AS THE HORIZONTAL BARS AND LAP IN ACCORDANCE WITH THE SPLICE TABLE 1 HEREON.
7. ALL REBAR SHALL BE PROPERLY ALIGNED AND TIED IN PLACE BEFORE PLACING CONCRETE. ALL PEDESTAL, WALL DOWELS AND VERTICAL STEEL SHALL BE ACCURATELY LOCATED AND SECURED IN PLACE SO THAT IT REMAINS IN POSITION DURING THE PLACEMENT OF CONCRETE. ANY REBAR IMPROPERLY INSTALLED SHALL BE REMOVED AT NO ADDITIONAL COST TO THE OWNER.
8. FORM TIES SHALL BE EITHER THREADED OR SNAP OFF TYPE SO THAT NO METAL WILL BE LEFT WITHIN 1" OF THE SURFACE OF THE WALL. FOLLOWING REMOVAL OF FORM TIES, RECESSES ARE TO BE CAREFULLY FILLED AND POINTED WITH MORTAR.
9. SUBSTITUTIONS OF EXPANSION ANCHORS FOR EMBEDDED ANCHORS SHOWN ON DRAWINGS WILL NOT BE PERMITTED.

TABLE 1 – LAP SPLICE AND HOOK LENGTH

f'c = 4,000psi
Fy = 60,000psi

BAR SIZE	CLASS "A" SPLICE TOP BARS	CLASS "A" SPLICE OTHER BARS	CLASS "B" SPLICE TOP BARS	CLASS "B" SPLICE OTHER BARS	HOOK LENGTH
#3	19"	15"	24"	19"	6"
#4	25"	19"	32"	25"	8"
#5	31"	24"	40"	31"	10"
#6	37"	29"	48"	37"	12"
#7	54"	42"	70"	54"	14"
#8	62"	48"	80"	62"	16"
#9	70"	54"	91"	70"	19"
#10	79"	61"	102"	79"	22"
#11	87"	67"	113"	87"	24"

TABLE 1 NOTES

1. LAP SPLICES AND HOOKS SHALL BE IN ACCORDANCE WITH THE TABLE 1 UNLESS DETAILED OTHERWISE.
2. LENGTHS SHOWN CONFORM TO THE NON-SEISMIC PROVISIONS OF ACI 318-11 FOR UNCOATED BARS NOT ENCLOSED BY CLOSELY SPACED SPIRALS OR TIES. DEVELOPMENT OF REINFORCEMENT NOT COVERED BY THE TABLE SHALL CONFORM TO ACI 318-11.
3. THE MINIMUM CLEAR SPACING BETWEEN PARALLEL BARS IN A LAYER SHALL BE 3 BAR DIAMETERS BUT NOT LESS THAN 1-1/2 TIMES THE MAXIMUM SIZE OF COARSE AGGREGATE. THE MINIMUM CLEAR COVER SHALL BE PER THE STRUCTURAL DETAILS BUT NOT LESS THAN ONE BAR DIAMETERS.
4. TOP BARS ARE HORIZONTAL REINFORCEMENT PLACED SO THAT MORE THAN 12 INCHES OF CONCRETE IS CAST BELOW THE REINFORCEMENT.
5. HOOK LENGTH GIVEN IS THE STRAIGHT LINE DISTANCE FROM THE LOCATION OF MAXIMUM STRESS IN THE BAR TO THE OUTSIDE END OF THE HOOK. MULTIPLY LENGTHS GIVEN BY 0.7 FOR HOOKS WITH SIDE COVER NORMAL TO THE HOOK NOT LESS THAN 2-1/2 INCHES AND FOR 90 DEGREE HOOKS, COVER ON BAR EXTENSION BEYOND HOOK NOT LESS THAN 2 INCHES.

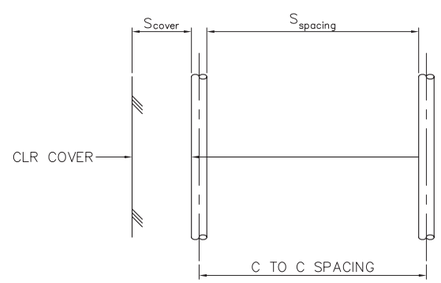

REGISTERED PROFESSIONAL ENGINEER WILBERT Y. CHO NO. C36266 EXP. 6-30-18 CIVIL STATE OF CALIFORNIA
8-3-16

US Army Corps of Engineers
San Francisco District
1455 Market Street
San Francisco, CA 94103

CHO DESIGN ASSOCIATES, INC.
2001 RIDGE HILL AVE. Suite 6-206
COSTA MESA, CA 92628
PHONE: (714) 427-0680

Mark	Description	Date	Appr.

SUBMITTED:
Chief, Civil Design Section
APPROVAL RECOMMENDED:
Chief, Engineering Branch
APPROVED:
Chief, Engineering & Technical Services

DESIGNED BY: WYC
CHECKED BY: CMC
DRAWN BY: CMC
DATE: 8-4-2016
SHEET NO. 47 of 71
DRAWING NO.

PREPARED UNDER THE DIRECTION OF
JOHN C. MORROW
LT. COLONEL, C.E., DISTRICT COMMANDER

SANTA CLARA COUNTY, CALIFORNIA
UPPER BERRYESSA CREEK FLOOD RISK MANAGEMENT PROJECT

STRUCTURAL
GENERAL NOTES

Sheet reference number
S-100

CONFORMED DRAWING

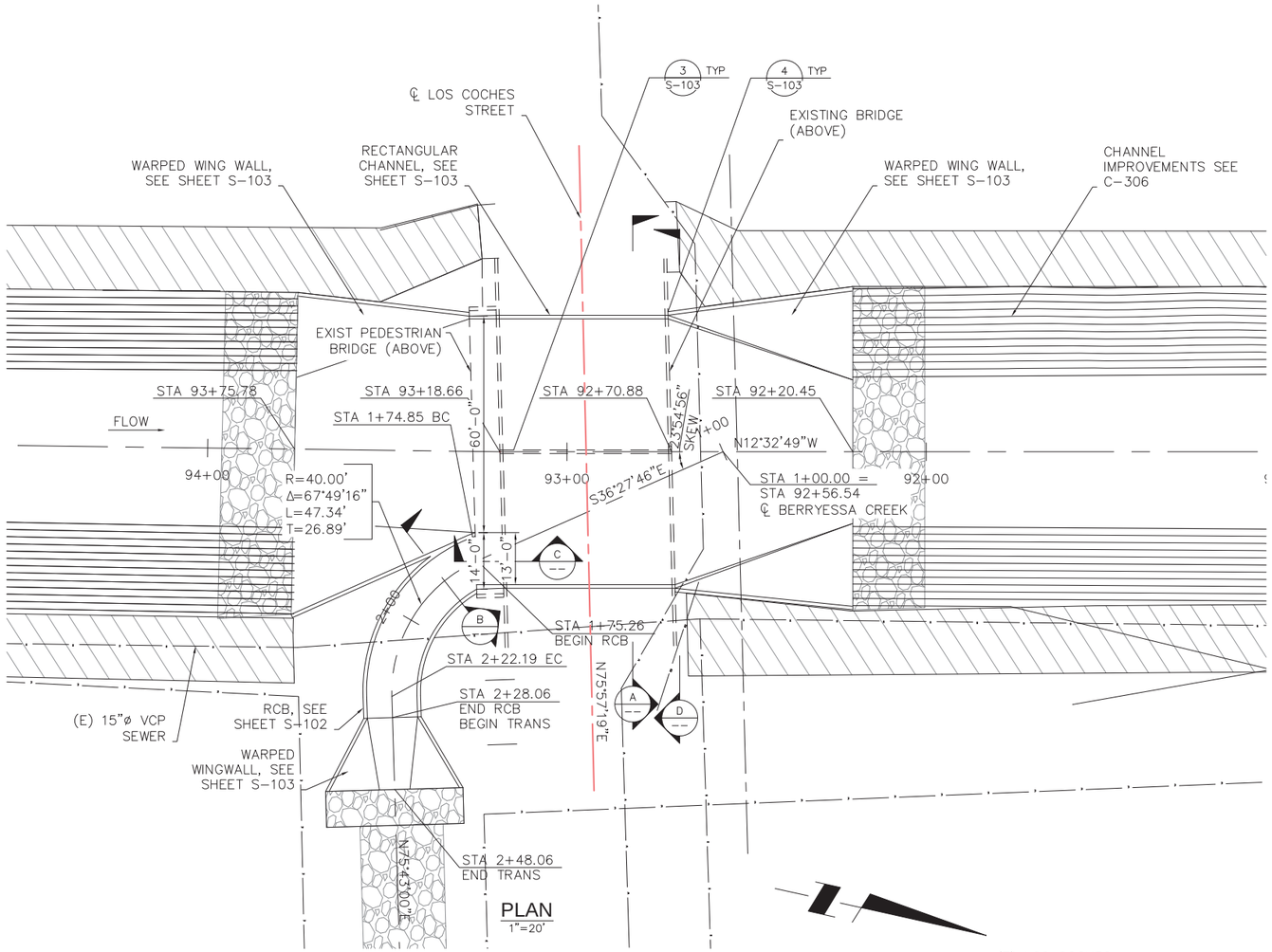

PLAN
1"=20'

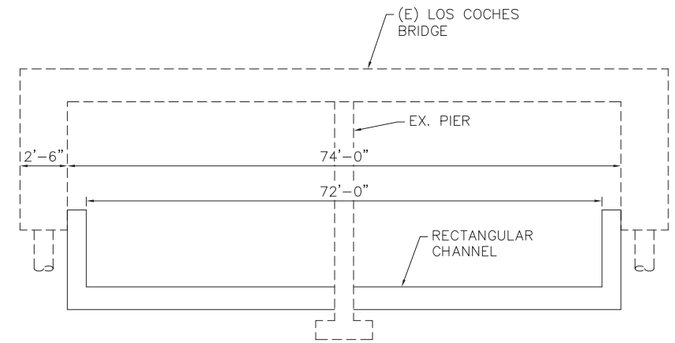

SECTION A-A
NO SCALE

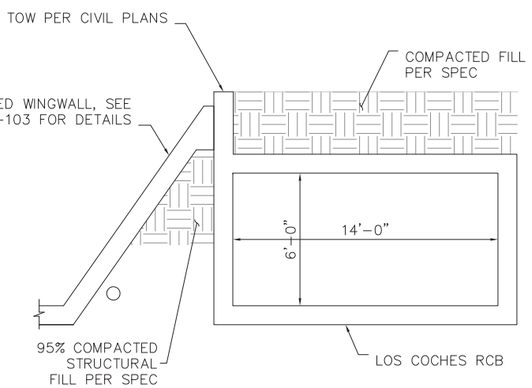

SECTION B-B
NO SCALE

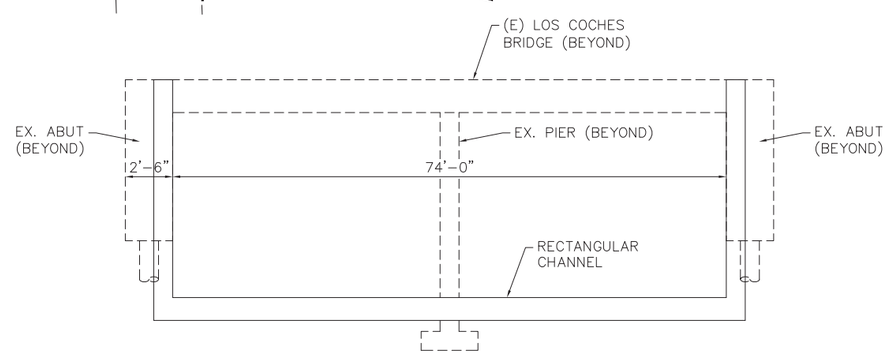

SECTION D-D
NO SCALE

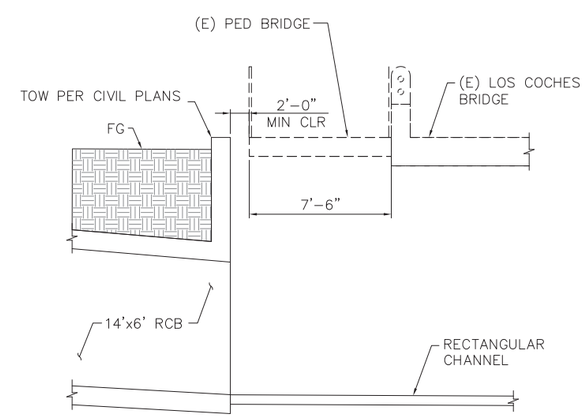

SECTION C-C
NO SCALE

REGISTERED PROFESSIONAL ENGINEER WILBERT Y. CHO NO. C36266 EXP. 6-30-18 CIVIL STATE OF CALIFORNIA
8-3-16

US Army Corps of Engineers
San Francisco District
1455 Market Street
San Francisco, CA 94103

CHO DESIGN ASSOCIATES, INC.
2001 RIDGE HILL AVE. Suite 6-206
COSTA MESA, CA 92626
PHONE: (714) 427-0680

Mark	Description	Date	Appr.

DESIGNED BY: WYC	CHECKED BY: CMC	DRAWN BY: CMC	
DATE: 8-4-2016	SHEET NO. 48 of 71	DRAWING NO.	

SUBMITTED:
Chief, Civil Design Section
APPROVAL RECOMMENDED:
Chief, Engineering Branch
APPROVED:
Chief, Engineering & Technical Services

PREPARED UNDER THE DIRECTION OF
JOHN C. MORROW
LT. COLONEL, C.E., DISTRICT COMMANDER

SANTA CLARA COUNTY, CALIFORNIA
UPPER BERRYESSA CREEK FLOOD RISK MANAGEMENT PROJECT

LOS COCHES BRIDGE MODIFICATIONS

Sheet reference number
S-101

P:\Watt\T33419.01 Berryessa 100% Design USACE\4 Closeout\Conformed Plans\Wet Stamp\Structures\16-0509 Berryessa Struc CADD Files\ S-101.DWG 04 Aug 2016 - 8:50am

CONFORMED DRAWING

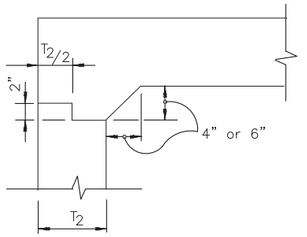

TOP OF WALL

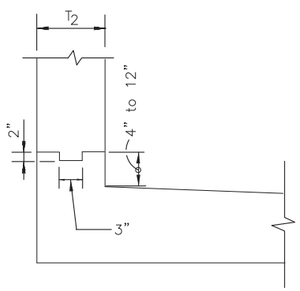

BASE OF WALL

CONSTRUCTION JOINT DETAILS

NOT TO SCALE

NOTES:

1. FILTER FABRIC INSTALLATION, PLACEMENT, AND COMPACTION OF A.B. MATERIAL SHALL BE OBSERVED AND TESTED BY THE GEOTECHNICAL CONSULTANT.
2. FOR ADDITIONAL REQUIREMENTS SEE SPECIFICATIONS
3. STIRRUPS REQUIRED FOR FULL LENGTH OF BOX. SEE BELOW FOR DETAIL.

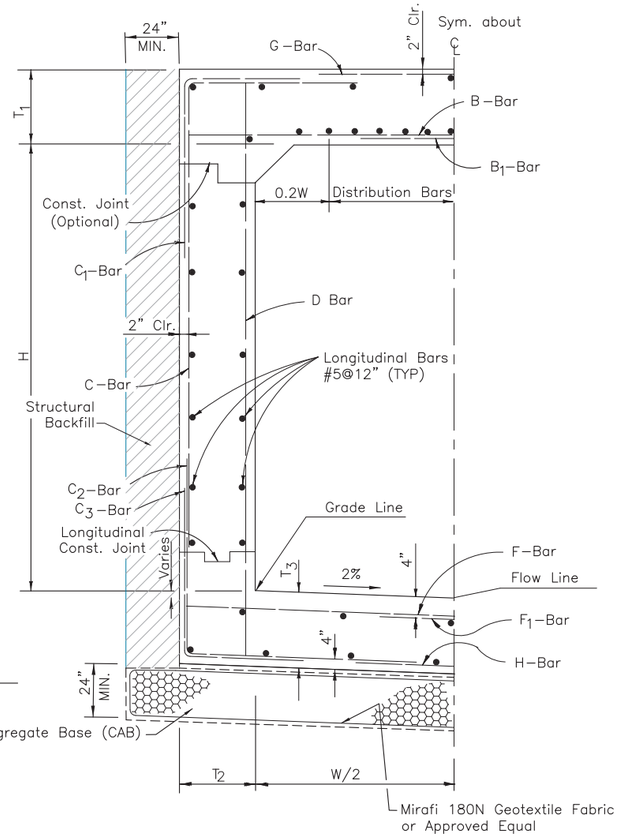

TYPICAL SINGLE RCB SECTION

NOT TO SCALE

BOX SECTION			LOS COCHES	PIEDMONT
Design Cover			5' Max	2' Max
Live Load			HS20-44	E80
Width		W	14'-0"	14'-0"
Height		H	6'-0"	6'-0"
Top Slab Thickness		T_1	18"	30"
Side Wall Thickness		T_2	12"	16"
Bottom Slab Thickness		T_3	18"	30"
B Bars	Bar No. & Spacing		#8@12"	#8@8"
	Length		CONT	CONT
B_1 Bars	Bar No. & Spacing		#7@12"	#8@8"
	Length		CONT	CONT
C Bars	Bar No. & Spacing		#7@12"	#8@12"
	Horizontal Length		5'-8"	6'-2"
	Vertical Length		8'-2"	8'-2"
C_1 Bars	Bar No. & Spacing		#7@12"	#8@12"
	Horizontal Length		5'-8"	6'-2"
	Vertical Length		5'-8"	6'-2"
C_2 Bars	Bar No. & Spacing		#7@12"	#8@12"
	Horizontal Length		5'-8"	6'-2"
	Vertical Length		6'-6"	7'-4"
C_3 Bars	Bar No. & Spacing		#7@12"	#8@12"
	Horizontal Length		5'-8"	6'-2"
	Vertical Length		6'-6"	7'-4"
D Bars	Bar No. & Spacing		#5@12	#5@12"
	Length		CONT	CONT
F Bars	Bar No. & Spacing		#7@12"	#9@12"
	Length		CONT	CONT
F_1 Bars	Bar No. & Spacing		#7@12"	#9@12"
	Length		CONT	CONT
G Bars	Bar No. & Spacing		#7@12"	#7@12"
	Length		CONT	CONT
H Bars	Bar No. & Spacing		#7@12"	#7@12"
	Length		CONT	CONT
Distrib Bars	Bar No.		#5	#5
	No.		12	18

NUMBER OF LONGITUDINAL REINFORCEMENT

Top slab (Includes Distrib)	42	48
Bottom Slab	30	30
Each Side Wall	12	12
Totals	96	102

Concrete Cu. Yds./Lin. Ft	2.3	3.7
Steel Lbs/Lin. Ft	350	480

RCB LOCATION SCHEDULE

Box Sect.	Station From	Station To
LOS COCHES	1+75.26	2+28.06
PIEDMONT	1+69.57	2+07.37

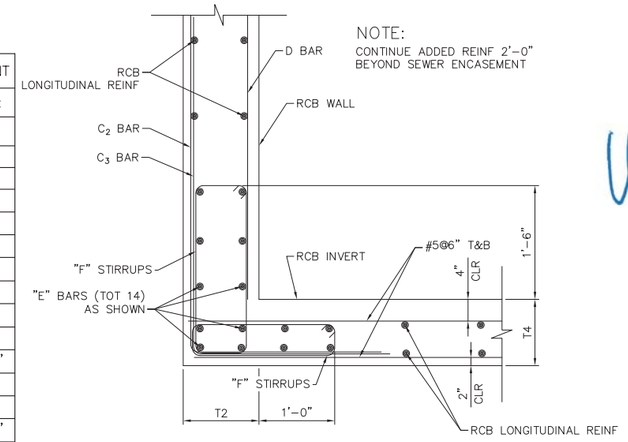

NOTE:
CONTINUE ADDED REINF 2'-0" BEYOND SEWER ENCASEMENT

	T2	T4	"E" BARS	"F" STIRRUPS
LOS COCHES SEWER CROSSING	1'-0"	10½"	#5x8'-0"	#4@6"
PIEDMONT SEWER CROSSING	1'-4"	10½"	#6x8'-0"	#5@5"

SECTION A-A

NOT TO SCALE

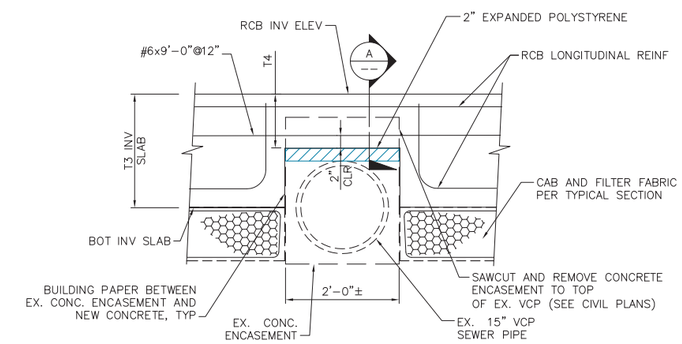

NOTE: ALL REINF SHOWN IN ADDITION TO TYPICAL REINF PER TABLE HEREON.

TYPICAL SEWER CROSSING DETAIL

NOT TO SCALE

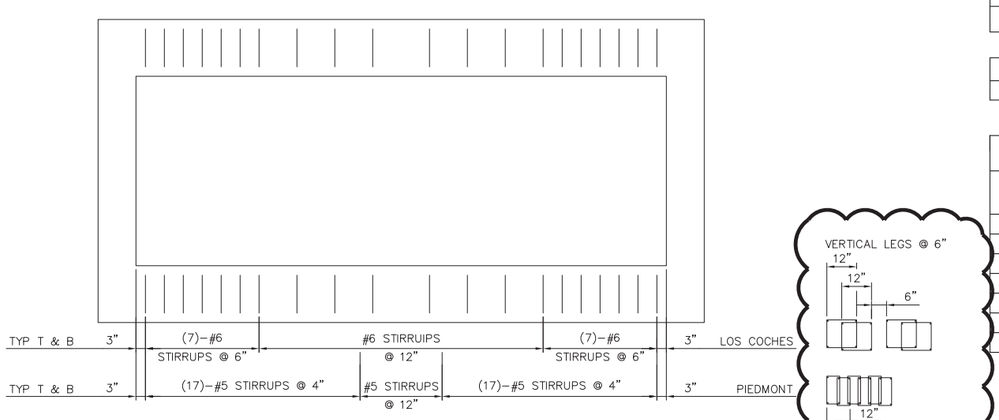

TYPICAL STIRRUP SECTION

NOT TO SCALE

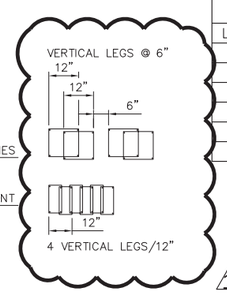

1

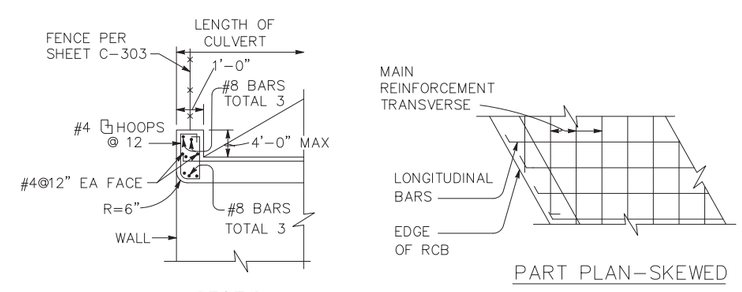

SECTION

PART PLAN-SKEWED

TYPICAL PARAPET DETAIL

NOT TO SCALE

US Army Corps of Engineers
San Francisco District
1455 Market Street
San Francisco, CA 94103

CHO DESIGN ASSOCIATES, INC.
2001 RIDGE HILL AVE. Suite 6-206
COSTA MESA, CA 92628
PHONE: (714) 427-0680

REGISTERED PROFESSIONAL ENGINEER WILBERT Y. CHO NO. C36266 EXP. 6-30-18 CIVIL STATE OF CALIFORNIA

8-3-16

Mark	Description	Date	Appr.
1	STEEL REINFORCEMENT PLACEMENT	7/6/16	

DESIGNED BY: WYC
CHECKED BY: CMC
DRAWN BY: CMC
DATE: 8-4-2016
SHEET NO. 49 of 71
DRAWING NO.

SUBMITTED:
Chief, Civil Design Section
APPROVAL RECOMMENDED:
Chief, Engineering Branch
APPROVED:
Chief, Engineering & Technical Services

PREPARED UNDER THE DIRECTION OF
JOHN C. MORROW
LT. COLONEL, C.E., DISTRICT COMMANDER

SANTA CLARA COUNTY, CALIFORNIA
UPPER BERRYESSA CREEK FLOOD RISK MANAGEMENT PROJECT

RCB STRUCTURAL DETAILS

Sheet reference number
S-102

P:\Wat\T33419.01 Berryessa 100% Design USACE\4 Closeout\Conformed Plans\Wet Stamp\Structures\16-0509 Berryessa Struc CADD Files\ REVISED S-102.dwg 04 Aug 2016 - 8:45am

CONFORMED DRAWING

	STATION LIMITS FROM	STATION LIMITS TO	SECTION NUMBER	SIZE H (FT)	SIZE W (FT)	THICKNESS (INCHES) T	T_1	T_2	T_3	B_1 BAR & SPACING	B_1 HORIZ. LENGTH	B_1 VERT. LENGTH	B_2 BAR & SPACING	B_2 HORIZ. LENGTH	B_2 VERT. LENGTH	B_3 BAR & SPACING	B_3 HORIZ. LENGTH	B_3 VERT. LENGTH	B_4 BAR & SPACING	B_4 HORIZ. LENGTH	B_4 VERT. LENGTH	B_5 BAR & SPACING	B_5 HORIZ. LENGTH	B_5 VERT. LENGTH	B_7 BAR & SPACING	B_7 HORIZ. LENGTH	B_8 BAR & SPACING	B_8 HORIZ. LENGTH
	CHANNEL																											
	87+21.43	87+71.52	1	13'	53'	24"	12"	24"	12"	#8@12"	30'-0"	FULL	#8@12"	20'-4"	9'-0"	–	–	–	#6@12"	2'-0"	FULL	#6@12"	2'-0"	9'-0"	#6@12"	30'-2"	#6@12"	20'-0"
	92+20.88	92+70.88	1	12'	74'	21"	12"	21"	12"	#8@12"	42'-6"	FULL	#8@12"	28'-8"	8'-6"	–	–	–	#6@12"	1'-9"	FULL	#6@12"	1'-9"	8'-6"	#6@12"	41'-8"	#6@12"	31'-6"
	92+70.88	93+26.17	5	3.5'	72'	21"	12"	–	10"	#8@12"	41'-6"	FULL	#8@12"	27'-8"	1'-9"	–	–	–	#6@12"	1'-9"	FULL	–	–	–	#6@12"	41'-8"	#6@12"	31'-6"
	93+26.17	93+76.17	1	12'	60'	21"	12"	21"	12"	#8@12"	33'-6"	FULL	#8@12"	22'-6"	8'-6"	–	–	–	#6@12"	1'-9"	FULL	#6@12"	1'-9"	8'-6"	#6@12"	33'-8"	#6@12"	23'-6"
LOS COCHES	2+28.06	2+48.06	1	10'	14'	12"	12"	12"	12"	#5@12"	9'-0"	FULL	#5@12"	9'-0"	FULL	–	–	–	#5@12"	1'-0"	FULL	–	–	–	#5@12"	17'-0"	–	–
PIEDMONT	2+08.22	2+28.58	1																									

(1) ADJUST VERTICAL LENGTHS OF B_1 & B_4 BARS AND HORIZONTAL LENGTHS OF B_1 AND B_7 ACCORDINGLY.

(2) ADJUST VERTICAL LENGTHS OF B_1 & B_4 BARS AND HORIZONTAL LENGTHS OF B_1, B_2 AND B_7 ACCORDINGLY.

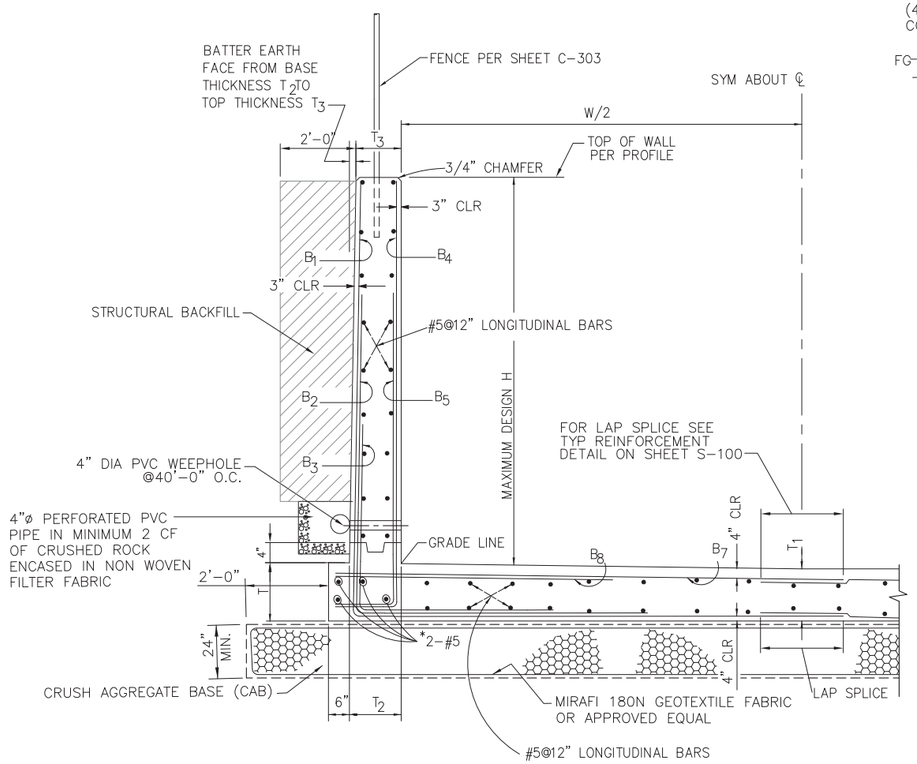

1 VERTICAL WALL CHANNEL TYPICAL SECTION

NO SCALE

DESIGN DATA

LOAD:

AT REST PRESSURE: 72.8 pcf

CASE 1: EXTERNAL AT REST PRESSURE + TRAFFIC SURCHARGE
CASE 2: EXTERNAL AT REST PRESSURE + INTERNAL WATER

CASE 3: EXTERNAL AT REST PRESSURE + EXTERNAL WATER

CASE 4: EXTERNAL AT REST PRESSURE + SEISMIC 15 pcf

REINFORCED CONCRETE:

f_c'= 4,000 psi , 0.50 WATER CEMENT RATIO
f_y= 60,000 psi

STRENGTH DESIGN PER ARMY CORPS EM 1110-2-2104

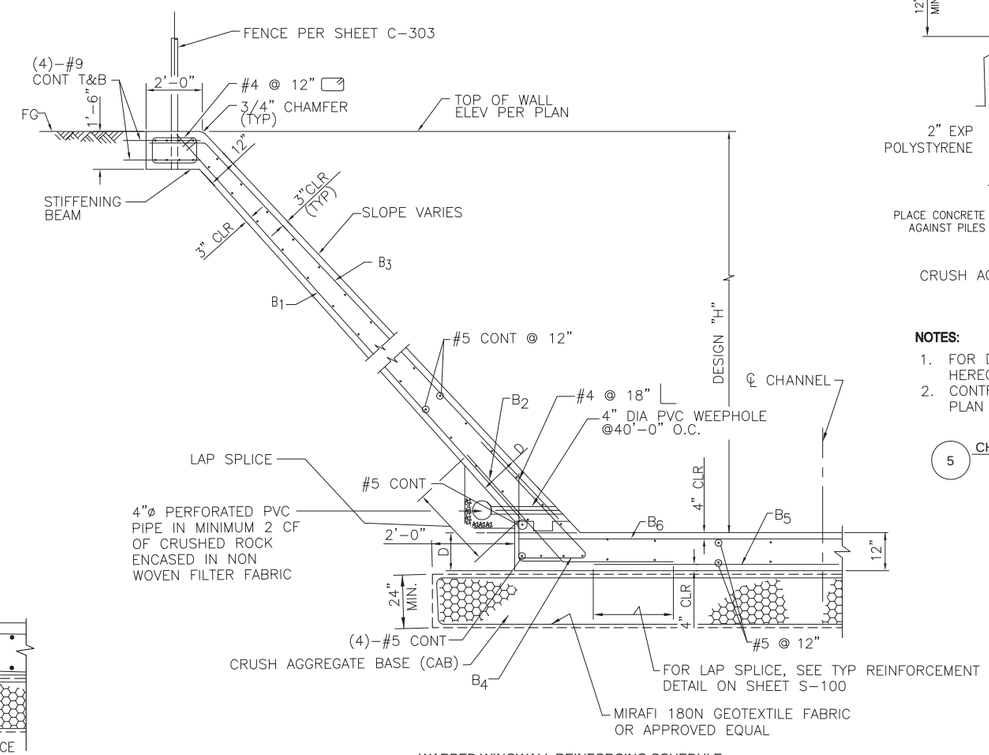

WARPED WINGWALL REINFORCING SCHEDULE

ELEMENT	LOCATION	B1	B2	B3	B4	B5	B6	D	MAX DES. H
1 : 1 TO 2 : 1 SLOPE	CONST LINE	#5 @ 12"	#5 @ 12"	#5 @ 12"	#5@ 12"	#5 @ 12"	#5 @ 12"	15"	13'-0"
1 : 1 SLOPE TO VERTICAL	CONST LINE	REFER TO VERTICAL WALL CHANNEL TYPICAL SECTION, THIS SHEET							

2 TRAPEZOIDAL CHANNEL TYPICAL SECTION

NO SCALE

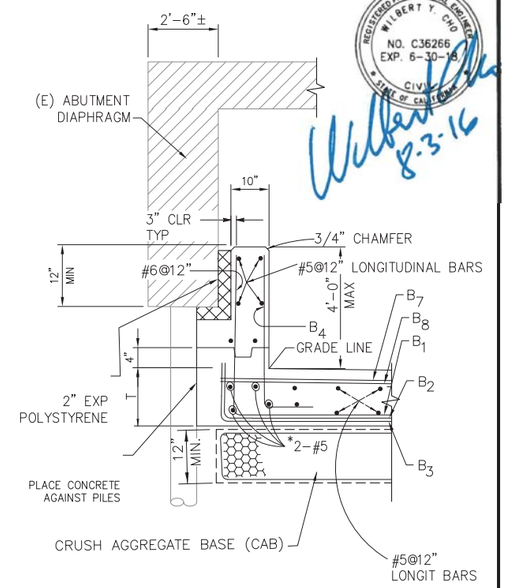

NOTES:

1. FOR DETAILS NOT SHOWN, SEE DETAIL 1 HEREON
2. CONTRACTOR TO SUBMIT EXCAVATION & SHORING PLAN TO CONSTRUCT CHANNEL AT ABUTMENT

5 CHANNEL UNDER BRIDGE TYPICAL SECTION

NO SCALE

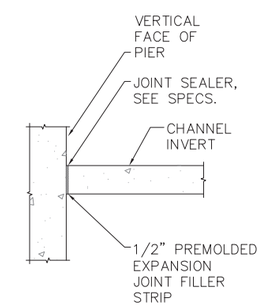

NOTE:
SLAB-ON-GRADE REINFORCEMENT NOT SHOWN FOR CLARITY.

3 EXPANSION JOINT @ PIER

NO SCALE

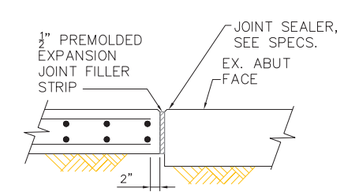

4 EXPANSION JOINT @ ABUTMENT

NO SCALE

US Army Corps of Engineers
San Francisco District
1455 Market Street
San Francisco, CA 94103

CHO DESIGN ASSOCIATES, INC.
2001 REDI HILL AVE. Suite 6-206
COSTA MESA, CA 92626
PHONE: (714) 427-0680

Mark	Description	Date	Appr.

DESIGNED BY: WYC
DRAWN BY: CMC
CHECKED BY: CMC
DATE: 8-4-2016
SHEET NO. 50 of 71
DRAWING NO.

SUBMITTED:
Chief, Civil Design Section
APPROVAL RECOMMENDED:
Chief, Engineering Branch
APPROVED:
Chief, Engineering & Technical Services

PREPARED UNDER THE DIRECTION OF
JOHN C. MORROW
LT. COLONEL, C.E., DISTRICT COMMANDER

SANTA CLARA COUNTY, CALIFORNIA
UPPER BERRYESSA CREEK FLOOD RISK MANAGEMENT PROJECT

CHANNEL TRANSITION DETAILS

Sheet reference number
S-103

CONFORMED DRAWING

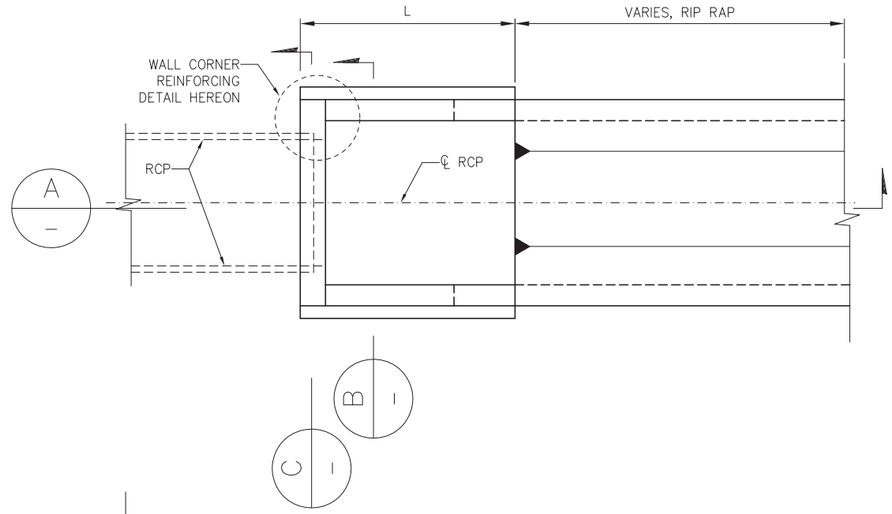

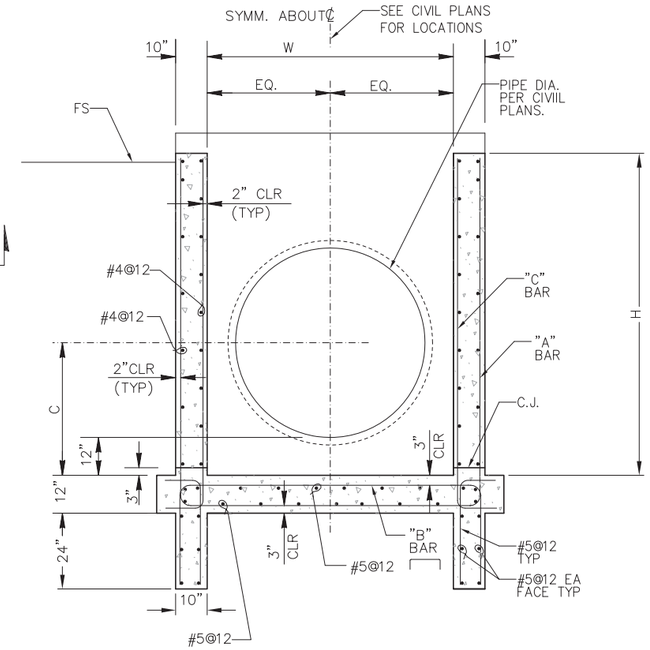

B SECTION
–

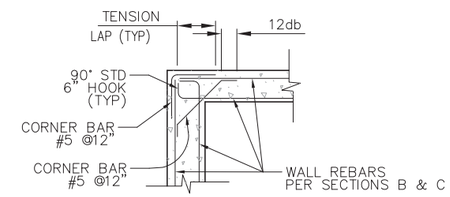

1 DETAIL
–

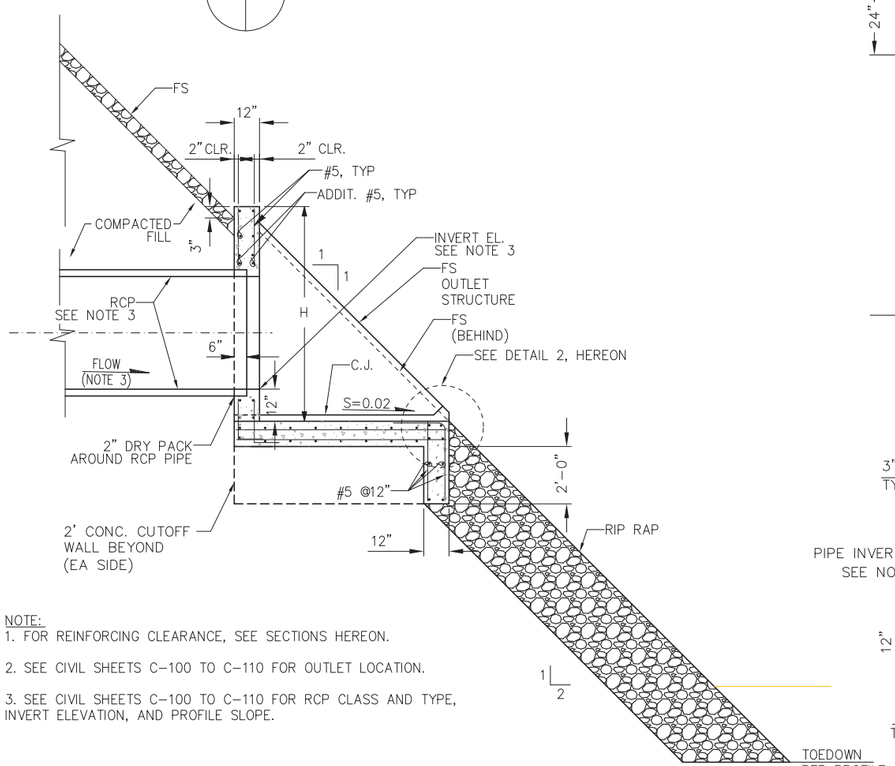

NOTE:
1. FOR REINFORCING CLEARANCE, SEE SECTIONS HEREON.
2. SEE CIVIL SHEETS C-100 TO C-110 FOR OUTLET LOCATION.
3. SEE CIVIL SHEETS C-100 TO C-110 FOR RCP CLASS AND TYPE, INVERT ELEVATION, AND PROFILE SLOPE.

A SECTION
–

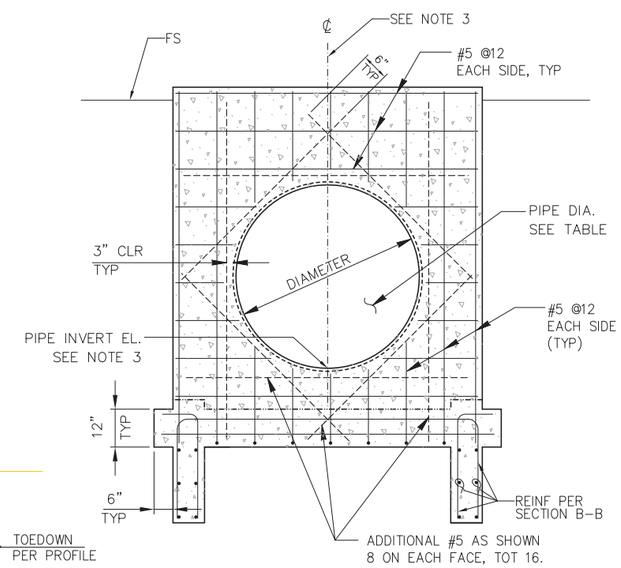

C SECTION
–

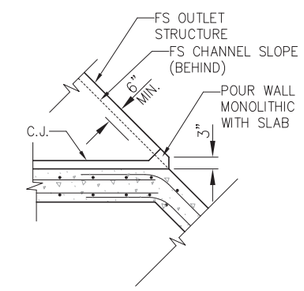

2 DETAIL
–

OUTLET STRUCTURE DIMENSIONS									
STATION	PIPE SIZE	LENGTH (L)	HEIGHT (H)	WIDTH (W)	(C)	"A" BAR	"B" BAR	"C" BAR	
87+64.30	24" RCP	–	–	–	–	–	–	–	*
90+16.85	18" RCP	8'-0"	4'-0"	4'-6"	1'-9"	#5@12"	#5@12"	#5@12"	
92+63.07	18" RCP	–	–	–	–	–	–	–	*
97+64.58	36" RCP	11'-0"	5'-6"	6'-0"	2'-6"	#5@6"	#5@12"	#5@12"	
98+88.87	24" RCP	9'-0"	4'-6"	5'-0"	2'-0"	#5@12"	#5@12"	#5@12"	
109+27.35	24" RCP	9'-0"	4'-6"	5'-0"	2'-0"	#5@12"	#5@12"	#5@12"	
137+45.87	30" RCP	10'-0"	5'-0"	5'-6"	2'-3"	#5@6"	#5@12"	#5@12"	
137+76.54	18" RCP	8'-0"	4'-0"	4'-6"	1'-9"	#5@12"	#5@12"	#5@12"	
151+03.88	18" RCP	8'-0"	4'-0"	4'-6"	1'-9"	#5@12"	#5@12"	#5@12"	
151+78.24	30" RCP	10'-0"	5'-0"	5'-6"	2'-3"	#5@6"	#5@12"	#5@12"	
155+94.49	18" RCP	8'-0"	4'-0"	4'-6"	1'-9"	#5@12"	#5@12"	#5@12"	
162+42.18	18" RCP	8'-0"	4'-0"	4'-6"	1'-9"	#5@12"	#5@12"	#5@12"	
163+44.63	18" RCP	8'-0"	4'-0"	4'-6"	1'-9"	#5@12"	#5@12"	#5@12"	
163+77.93	18" RCP	8'-0"	4'-0"	4'-6"	1'-9"	#5@12"	#5@12"	#5@12"	
171+38.56	18" RCP	8'-0"	4'-0"	4'-6"	1'-9"	#5@12"	#5@12"	#5@12"	
172+95.03	18" RCP	8'-0"	4'-0"	4'-6"	1'-9"	#5@12"	#5@12"	#5@12"	
174+66.42	18" RCP	8'-0"	4'-0"	4'-6"	1'-9"	#5@12"	#5@12"	#5@12"	
178+69.78	18" RCP	8'-0"	4'-0"	4'-6"	1'-9"	#5@12"	#5@12"	#5@12"	
183+04.17	18" RCP	8'-0"	4'-0"	4'-6"	1'-9"	#5@12"	#5@12"	#5@12"	
186+55.09	18" RCP	8'-0"	4'-0"	4'-6"	1'-9"	#5@12"	#5@12"	#5@12"	
190+63.17	18" RCP	8'-0"	4'-0"	4'-6"	1'-9"	#5@12"	#5@12"	#5@12"	

* TYPE II OUTLET PER SHEET S-105

REGISTERED PROFESSIONAL ENGINEER WILBERT Y. CHO NO. C36266 EXP. 6-30-18 CIVIL STATE OF CALIFORNIA
Wilbert Cho 8-3-16

US Army Corps of Engineers
San Francisco District
1455 Market Street
San Francisco, CA 94103

CHO DESIGN ASSOCIATES, INC.
2001 RIDD HILL AVE. Suite 6-206
COSTA MESA, CA 92626
PHONE: (714) 427-0680

Mark	Description	Date	Appr.
1	SOIL CEMENT REFERENCE DELETED	7/8/18	

DESIGNED BY: WYC
DATE: 8-4-2016
CHECKED BY: CMC
SHEET NO. 51 of 71
DRAWN BY: CMC
DRAWING NO.
PREPARED UNDER THE DIRECTION OF JOHN C. MORROW LT. COLONEL, C.E., DISTRICT COMMANDER

SUBMITTED:
Chief, Civil Design Section
APPROVAL RECOMMENDED:
Chief, Engineering Branch
APPROVED:
Chief, Engineering & Technical Services

SANTA CLARA COUNTY, CALIFORNIA
UPPER BERRYESSA CREEK FLOOD RISK MANAGEMENT PROJECT

STORM DRAIN OUTLET DETAILS

Sheet reference number
S-104

CONFORMED DRAWING

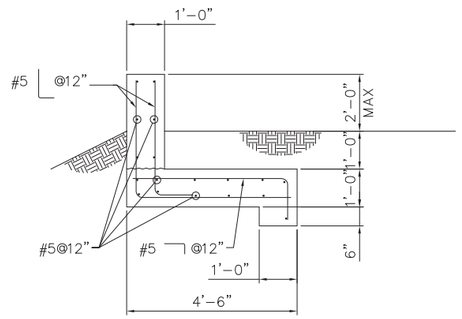

A — FLOODWALL SECTION

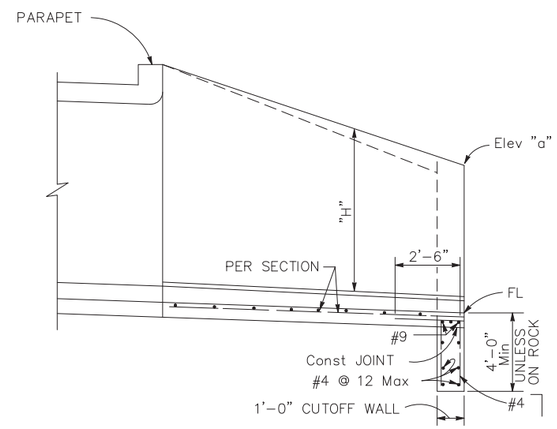

PART LONGITUDAL SECTION

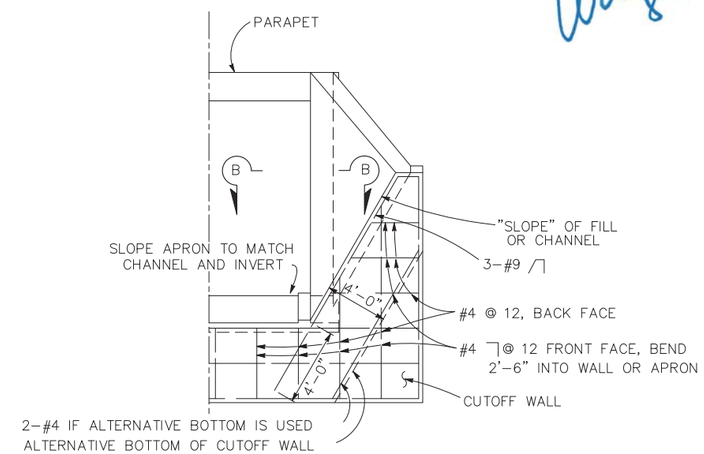

END ELEVATION

1 — WARPED WINGWALL CUTOFF WALL

REGISTERED PROFESSIONAL ENGINEER WILBERT Y. CHO NO. C36266 EXP. 6-30-18 CIVIL STATE OF CALIFORNIA

Wilbert Cho 8-3-16

US Army Corps of Engineers
San Francisco District
1455 Market Street
San Francisco, CA 94103

CHO DESIGN ASSOCIATES, INC.
2001 RED HILL AVE. Suite 6-206
COSTA MESA, CA 92626
PHONE: (714) 427-0680

Mark	Description	Date	Appr.

SUBMITTED:
Chief, Civil Design Section
APPROVAL RECOMMENDED:
Chief, Engineering Branch
APPROVED:
Chief, Engineering & Technical Services

DESIGNED BY: WYC
DATE: 8-4-2016
CHECKED BY: CMC
SHEET NO. 52 of 71
DRAWN BY: CMC
DRAWING NO.

PREPARED UNDER THE DIRECTION OF
JOHN C. MORROW
LT. COLONEL, C.E., DISTRICT COMMANDER

SANTA CLARA COUNTY, CALIFORNIA
UPPER BERRYESSA CREEK FLOOD RISK MANAGEMENT PROJECT

MISCELLANEOUS DETAILS

Sheet reference number
S-105

P:\Wat\T33419.01 Berryessa 100% Design USACE\4 Closeout\Conformed Plans\Wet Stamp\Structures\16-0509 Berryessa Struc CADD Files\ S-105.dwg 04 Aug 2016 - 8:53am

CONFORMED DRAWING

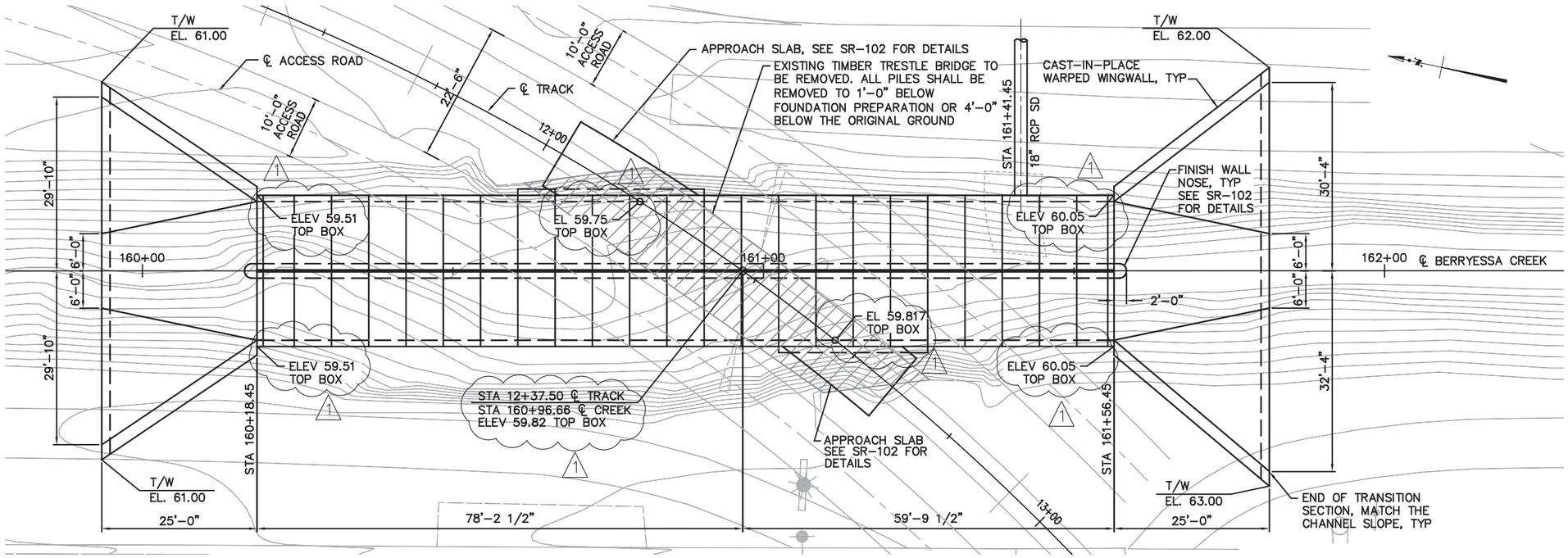

DETAIL H – UPRR CULVERT PLAN

SCALE: 1"=10'

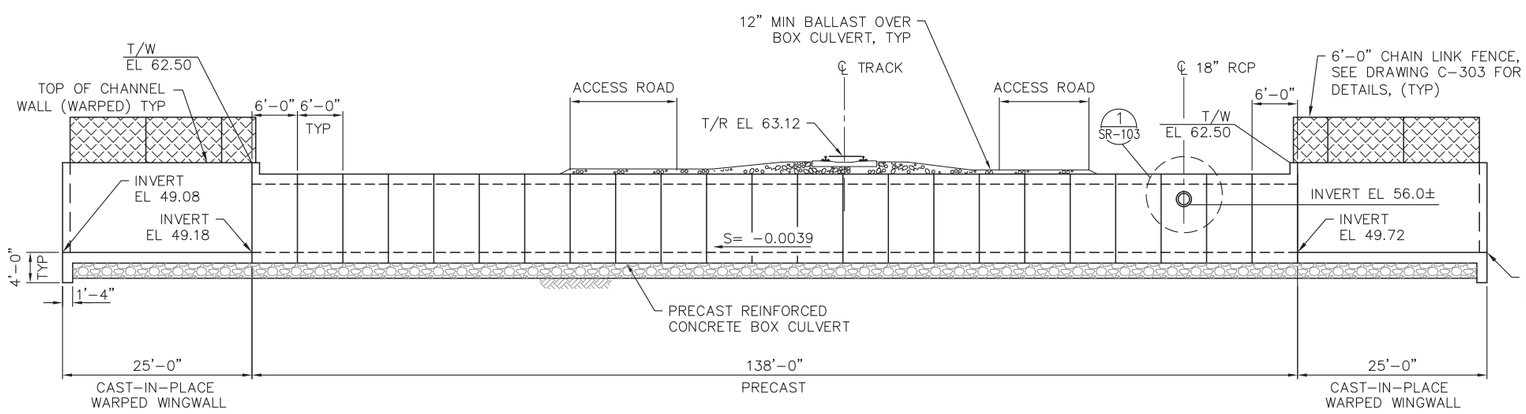

ELEVATION

SCALE: 1"=10'

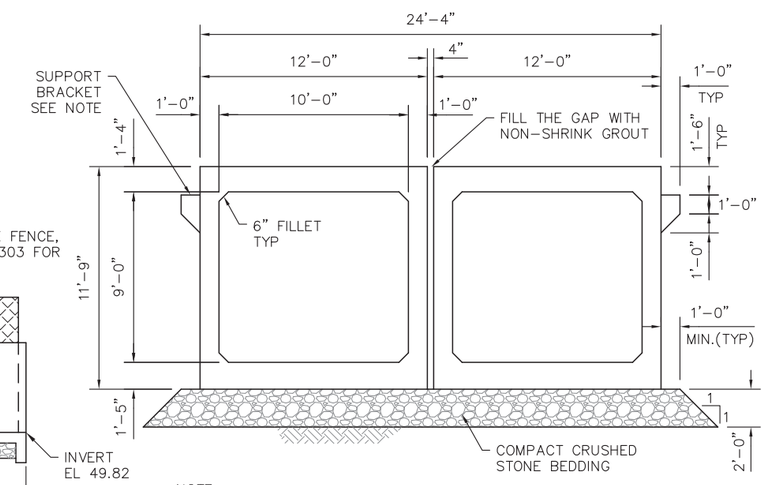

NOTE:
SUPPORT BRACKET WHERE APPROACH SLAB IS PRESENT, TYP.

TYPICAL SECTION

SCALE: 1/4"=1'-0"

NOTE:
SEE DRAWING RP-01 FOR TRACK ALIGNMENT AND PROFILE.

SCALE: 1"=10'

US Army Corps of Engineers
San Francisco District
1455 Market Street
San Francisco, CA 94103

TETRA TECH
17885 VON KARMAN AVE.,
SUITE 500
IRVINE, CA 92614
Phone: (949) 809-5000

Mark	Description	Date	Appr.
1	TOP BOX ELEVATIONS ADDED	07/06/16	

DESIGNED BY: CHB
DATE: 08/04/16
CHECKED BY: MG
SHEET NO. 53 of 71
DRAWING NO.
DRAWN BY: PZ

SUBMITTED:
Chief, Civil Design Section
APPROVAL RECOMMENDED:
Chief, Engineering Branch
APPROVED:
Chief, Engineering & Technical Services

PREPARED UNDER THE DIRECTION OF
JOHN C. MORROW
LT. COLONEL, C.E., DISTRICT COMMANDER

SANTA CLARA COUNTY, CALIFORNIA
UPPER BERRYESSA CREEK FLOOD RISK MANAGEMENT PROJECT
UPRR CULVERT
GENERAL PLAN & LAYOUT

Sheet reference number
SR-100

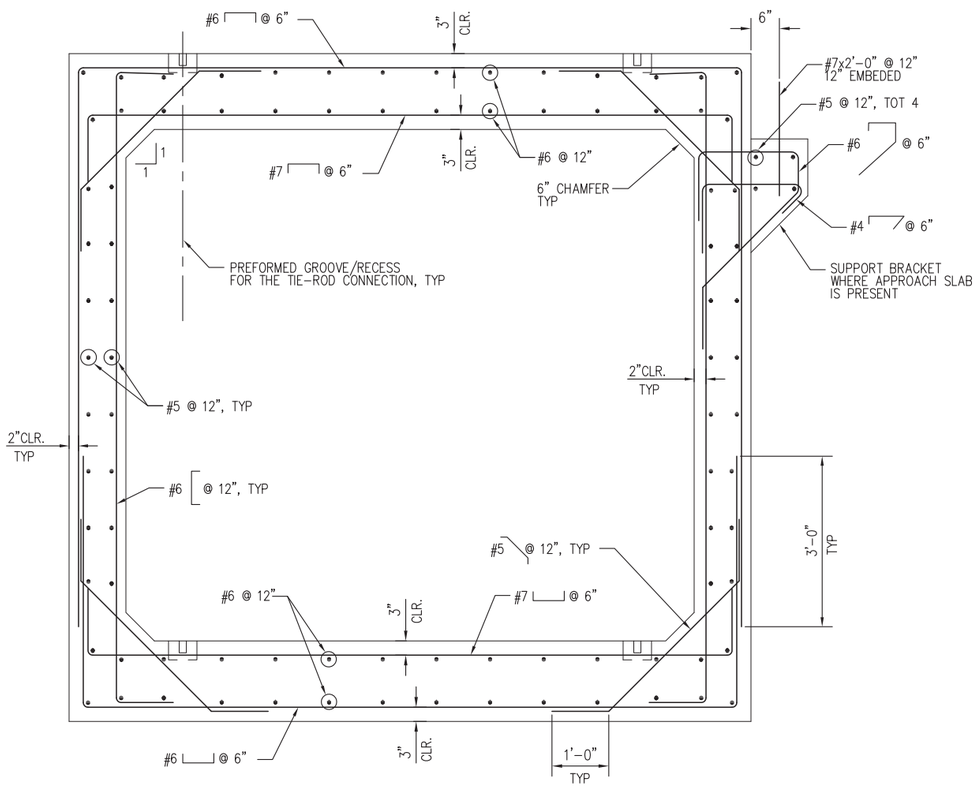

TYPICAL CONCRETE BOX SECTION

SCALE: 3/4"=1'-0"

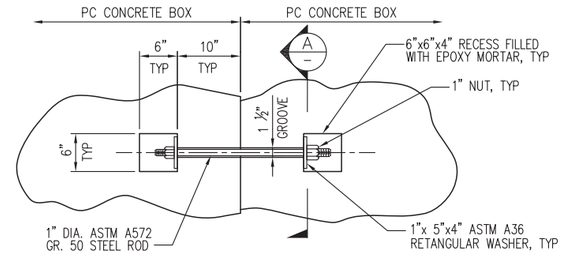

TIE-ROD MECHANICAL CONNECTION

NTS

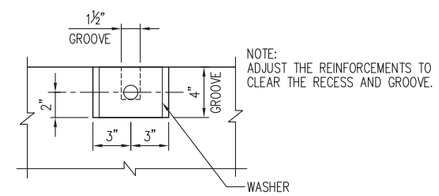

SECTION A-A

NTS

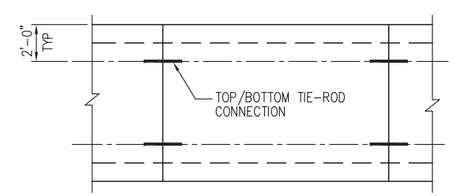

BOX PLAN VIEW

NTS

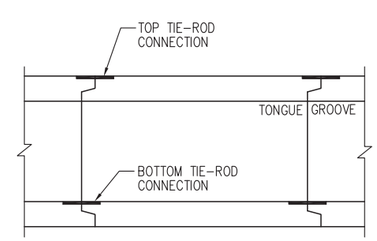

BOX SIDE ELEVATION

NTS

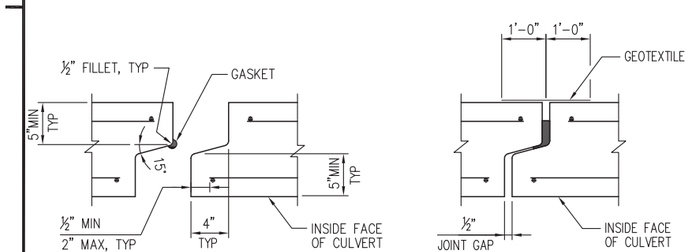

LONGITUDINAL JOINT DETAIL

NTS

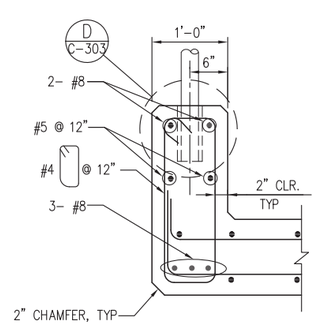

HEADWALL DETAIL

NTS

GENERAL NOTES:

DESIGN NOTES

1. SPECIFICATIONS:
   - AREMA MANUAL FOR RAILWAY ENGINEERING – 2015 – CULVERTS DESIGNED IN ACCORDANCE WITH PART 16, CHAPTER 8 OF AREMA MANUAL.
   - U.S. ARMY CORPS OF ENGINEERS ENGINEER MANUAL 1110-2-2104 – STRENGTH DESIGN FOR REINFORCED CONCRETE HYDRAULIC STRUCTURES – 1992
2. LATERAL LOAD
   - EQUIVALENT FLUID PRESSURE OF 51 PCF
3. MATERIAL PROPERTIES
   - CONCRETE: F'C = 4,000 PSI
   - REINFORCING STEEL: FY = 60,000 PSI

CONCRETE

1. CONCRETE MATERIAL, PLACING, CURING, AND TESTING TO BE PER AREMA MANUAL CHAPTER 8.
2. CEMENT SHALL COMPLY WITH CURRENT ASTM SPECIFICATION C150, TYPE II.
3. AIR-ENTRAINMENT SHALL COMPLY WITH ARTICLE 1.12 AND ARTICLE 1.12.4 OF CHAPTER 8 OF AREMA SPECIFICATION.
   THE TOTAL AIR CONTENT SHALL NOT BE LESS THAN 5% NOR MORE THAN 7% BY VOLUME.
4. WATER REDUCING ADMIXTURE SHALL COMPLY WITH THE CURRENT ASTM SPECIFICATION C494.
5. CONCRETE AGGREGATES TO COMPLY WITH CURRENT ASTM C33. COARSE AGGREGATES SHALL BE GRADED #4 TO 1" MAXIMUM SIZE.
6. THE MAXIMUM WATER/CEMENT RATIO SHALL NOT EXCEED 0.46.
7. THE MAXIMUM SLUMP SHALL NOT EXCEED 4".
8. COPIES OF THE DESIGN MIX SHALL BE SUBMITTED TO THE ENGINEER FOR APPROVAL.
9. ALL EXPOSED EDGES SHALL BE CHAMFERED ¾".

GALVANIZING

ALL STEEL PARTS SHALL BE GALVANIZED AFTER FABRICATION IN ACCORDANCE WITH THE CURRENT ASTM A123 AND A153, AS APPLICABLE.

AFTER GALVANIZING, ALL ITEMS SHALL BE FREE OF FINS, ABRASIONS, ROUGH OR SHARP EDGES AND OTHER SURFACE DEFECTS.

EPOXY

EPOXY MORTAR SHALL BE SIKADUR 31 OR APPROVED EQUEVALENT. MIXING AND APPLICATION OF THE EPOXY MORTAR SHALL BE IN ACCORDANCE WITH THE MANUFACTURER'S INSTRUCTIONS.

REINFORCING STEEL

1. ALL REINFORCING STEEL SHALL CONFORM TO ASTM A615 GRADE 60.
2. FABRICATION OF REINFORCING STEEL SHALL BE PER CHAPTER 7 OF THE CRSI MANUAL. DIMENSIONS OF THE BENDING DETAILS ARE OUT TO OUT.
3. MINIMUM COVERS FOR CONCRETE SHALL BE 2 INCHES UNLESS OTHERWISE NOTED. BAR LAP SPLICES OF LONGITUDINAL BARS SHALL BE 45 TIMES THE DIAMETER OF THE BARS.

BEDDING MATERIAL

BEDDING MATERIAL SHALL BE CRUSHED STONE, COMPACTED TO 95% MAXIMUM DENSITY OBTAINED AT OPTIMUM MOISTURE CONTENT AS DETERMINED BY ASTM D1557. THE COMPACTED DEPTH OF A SINGLE LAYER SHALL NOT EXCEED SIX INCHES.

UNSUITABLE MATERIAL SHALL BE REMOVED AND REPLACED WITH GRANULAR BACKFILL IDENTICAL TO SUBBALLAST. THE BACKFILL AND THE UPPER TWELVE INCHES OF SUBGRADE SHALL BE COMPACTED TO 90% OF MAXIMUM DENSITY DETERMINED BY ASTM D1557.

CONSTRUCTION NOTES

1. PRIOR TO STARTING ANY WORK, THE CONTRACTOR SHALL SUBMIT CONSTRUCTION STAGING PLANS TO THE ENGINEER FOR APPROVAL.
2. THE CONTRACTOR SHALL VERIFY ALL DIMENSIONS AND ELEVATIONS PRIOR TO CONSTRUCTION.
3. THE CONTRACTOR SHALL SUBMIT THE PRECAST BOX CULVERT SHOP DRAWINGS TO THE ENGINEER FOR REVIEW PRIOR TO CONSTRUCTION.
4. CONTRACTOR TO COORDINATE WITH UP FOR THE SCHEDULED CLOSURE AND PROVIDE CONTINGENCY PLAN.

LIFTING DEVICE

LIFTING DEVICE SHALL BE DESIGNED BY THE CONTRACTOR WITH MINIMUM SAFETY FACTOR OF 4 AND SHALL BE SUBMITTED TO THE ENGINEER FOR APPROVAL.

SURVEY

CULVERT STATIONING AND ELEVATION ARE BASED ON SURVEY DATED MARCH 2015.

US Army Corps of Engineers
San Francisco District
1455 Market Street
San Francisco, CA 94103

TETRA TECH
17885 VON KARMAN AVE.,
SUITE 500
IRVINE, CA 92614
Phone: (949) 809-5000

Mark	Description	Date	Appr.

DESIGNED BY: CHB | CHECKED BY: MG | DRAWN BY: PZ
DATE: 08/04/16 | SHEET NO. 54 of 71 | DRAWING NO.
SUBMITTED: Chief, Civil Design Section
APPROVAL RECOMMENDED: Chief, Engineering Branch
APPROVED: Chief, Engineering & Technical Services
PREPARED UNDER THE DIRECTION OF JOHN C. MORROW
LT. COLONEL, C.E., DISTRICT COMMANDER

SANTA CLARA COUNTY, CALIFORNIA
UPPER BERRYESSA CREEK FLOOD RISK MANAGEMENT PROJECT
UPRR CULVERT
BOX CULVERT DETAILS AND NOTES

Sheet reference number
SR-101

CONFORMED DRAWING

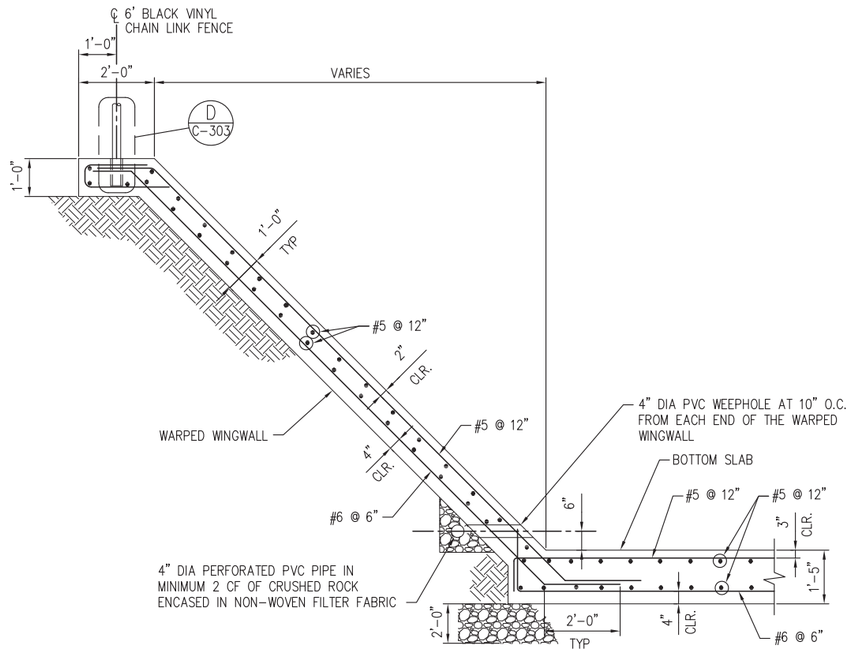

TYPICAL WARPED WINGWALL SECTION
SCALE: 1/2"=1'-0"

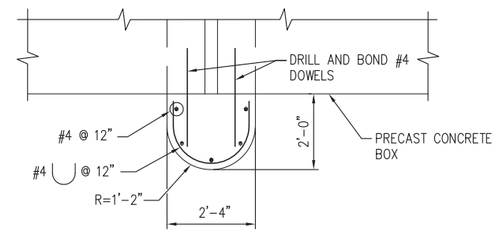

DETAIL 1
SCALE: 1/2"=1'-0"

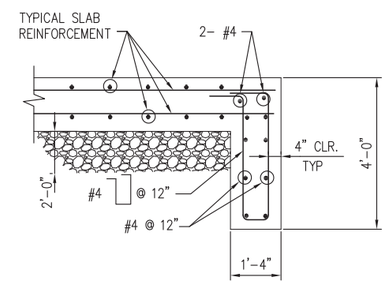

CUTOFF WALL DETAIL
SCALE: 1/2"=1'-0"

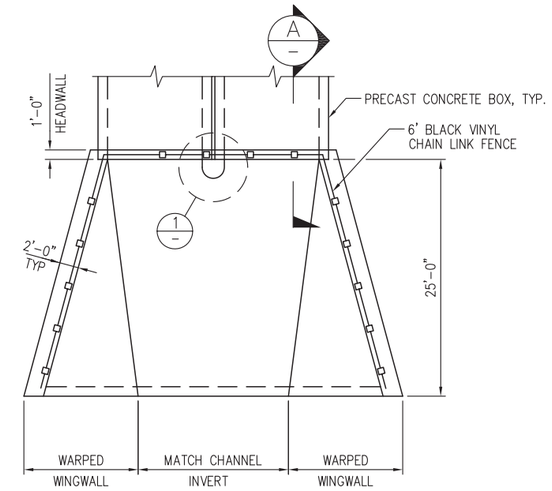

WARPED WINGWALL - PLAN
SCALE: 1/8"=1'-0"

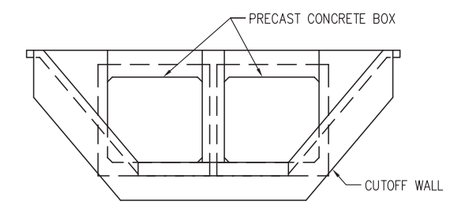

WARPED WINGWALL - ELEVATION
SCALE: 1/8"=1'-0"

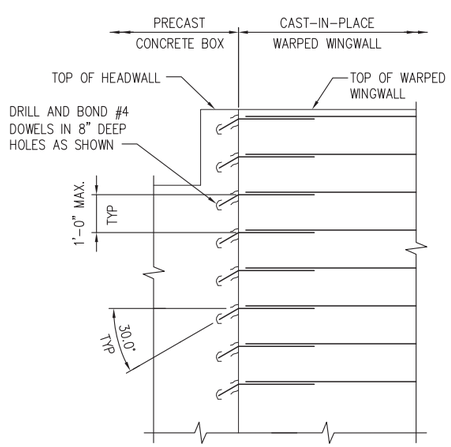

SECTION A-A
SCALE: 1/2"=1'-0"

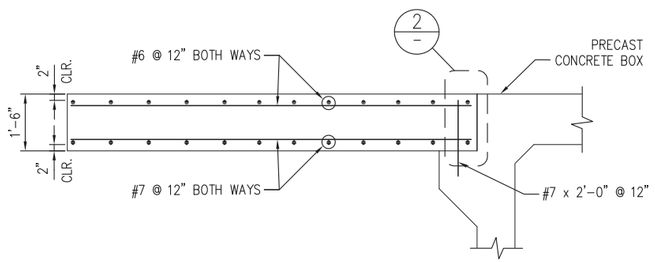

APPROACH SLAB REINFORCEMENT DETAIL
SCALE: 1/2"=1'-0"

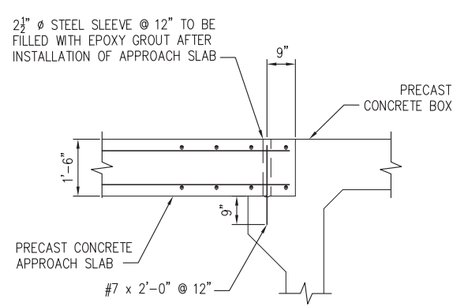

DETAIL 2
SCALE: 1/2"=1'-0"

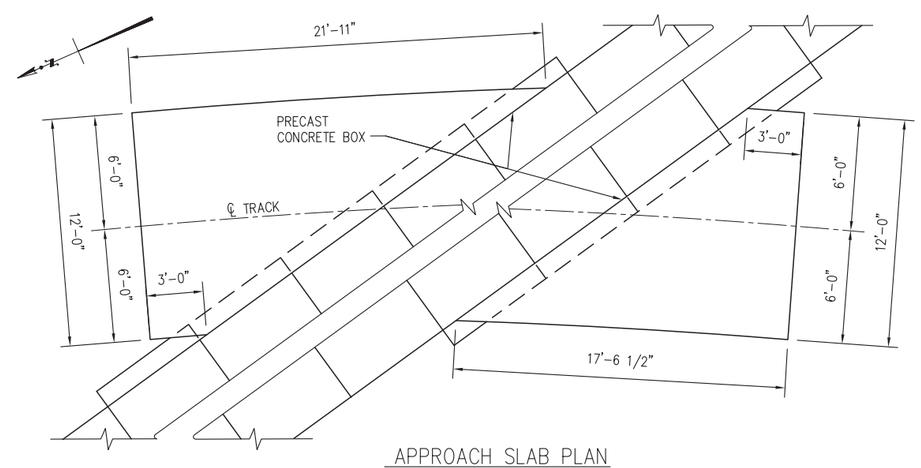

APPROACH SLAB PLAN
SCALE: 1/4"=1'-0"

REGISTERED PROFESSIONAL ENGINEER MOHAMMAD A. GOLWALLA No. C59996 EXP. 06/30/18 CIVIL STATE OF CALIFORNIA

US Army Corps of Engineers
San Francisco District
1455 Market Street
San Francisco, CA 94103

TETRA TECH
17885 VON KARMAN AVE.,
SUITE 500
IRVINE, CA 92614
Phone: (949) 809-5000

Mark	Description	Date	Appr.

DESIGNED BY: CHB | CHECKED BY: MG | DRAWN BY: PZ
DATE: 08/04/16 | SHEET NO. 55 of 71 | DRAWING NO.

SUBMITTED:
Chief, Civil Design Section
APPROVAL RECOMMENDED:
Chief, Engineering Branch
APPROVED:
Chief, Engineering & Technical Services

PREPARED UNDER THE DIRECTION OF
JOHN C. MORROW
LT. COLONEL, C.E., DISTRICT COMMANDER

SANTA CLARA COUNTY, CALIFORNIA
UPPER BERRYESSA CREEK FLOOD RISK MANAGEMENT PROJECT
UPRR CULVERT
CHANNEL TRANSITION DETAILS

Sheet reference number
SR-102

P:\Wats\T33419.01 Berryessa 100% Design USACE\4 Closeout\Conformed Plans\Wet Stamp\Railroad\d39202e3-9673-4801-b2c0-2c4567b288e9\17 17504_SR102.dwg, 04 Aug 2016 - 9:24am

CONFORMED DRAWING

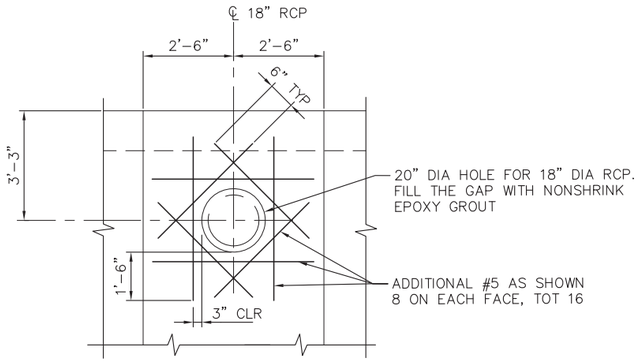

DETAIL 1
SCALE: NONE

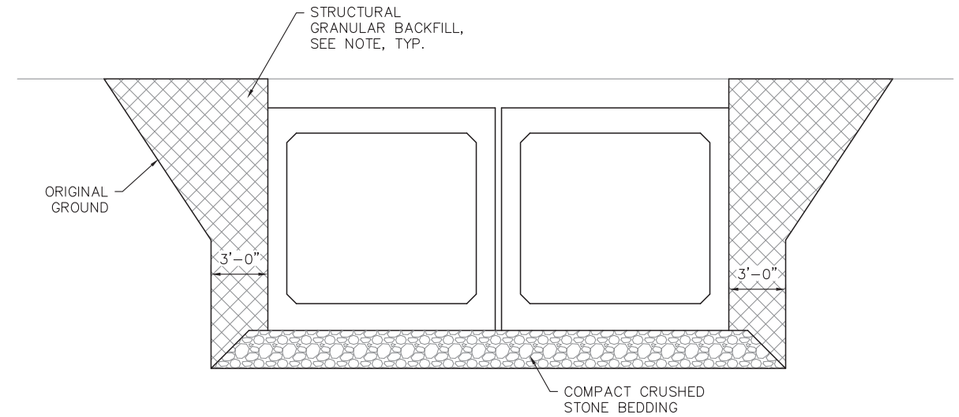

STRUCTURAL GRANULAR BACKFILL DETAIL
SCALE: 1/4"=1'-0"

NOTE: STRUCTURAL GRANULAR BACKFILL SHALL BE USED TO FILL THE ENTIRE BACKFILL AREA. STRUCTURAL GRANULAR BACKFILL SHALL BE USED TO FILL THE AREA BETWEEN THE WARPED WINGWALL AND THE ORIGINAL GROUND.

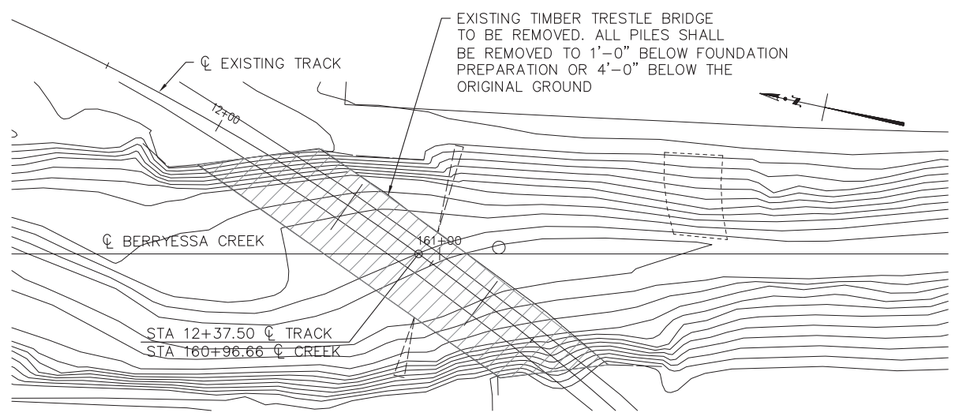

DEMOLITION PLAN
SCALE: NONE

REGISTERED PROFESSIONAL ENGINEER
MOHAMMAD A. GOLVAR
No. C59996
EXP. 06/30/18
CIVIL
STATE OF CALIFORNIA

US Army Corps of Engineers
San Francisco District
1455 Market Street
San Francisco, CA 94103

TETRA TECH
17885 VON KARMAN AVE.,
SUITE 500
IRVINE, CA 92614
Phone: (949) 809-5000

Mark	Description	Date	Appr.

DESIGNED BY: CHB | CHECKED BY: MG | DRAWN BY: PZ
DATE: 08/04/16 | SHEET NO. 56 of 71 | DRAWING NO.
PREPARED UNDER THE DIRECTION OF JOHN C. MORROW, LT. COLONEL, C.E., DISTRICT COMMANDER

SUBMITTED: Chief, Civil Design Section
APPROVAL RECOMMENDED: Chief, Engineering Branch
APPROVED: Chief, Engineering & Technical Services

SANTA CLARA COUNTY, CALIFORNIA
UPPER BERRYESSA CREEK FLOOD RISK MANAGEMENT PROJECT
UPRR CULVERT
MISCELLANEOUS DETAILS

Sheet reference number
SR-103

CONFORMED DRAWING

NOTES:
1. THE CITY OF MILPITAS IS CURRENTLY WORKING ON THE GRADE CROSSING SIGNAL IMPROVEMENTS.
2. CONTRACTOR TO VERIFY ELEVATIONS SHOWN IN PARENTHESIS PRIOR TO CONSTRUCTION.
3. CONTRACTOR SHALL DO NO WORK ON/IN S. MILPITAS BLVD. UPRR DOES ALL TRACK WORK & ALL WORK IN S. MILPITAS BLVD. UPRR SHALL ACQUIRE AND PERFORM WORK IDENTIFIED AS DONE BY "UPRR FORCES" UNDER SEPARATE PERMITTING AND COORDINATION WITH THE CITY OF MILPITAS. UPRR WILL DETERMINE BEGINNING AND END OF 72-HOUR WINDOW. ALL WORK MUST BE SCHEDULED FOR COMPLETION WITHIN A 72-HOUR WINDOW, INCLUDING ALL WORK COMPLETED BY UPRR FORCES. SCOPE MAY INCLUDE, BUT IS NOT NECESSARILY LIMITED TO:
   - SIGNAL WORK FOR MILPITAS AT-GRADE CROSSING (UPRR FORCES)
   - REMOVAL OF TRACK PANELS, INCLUDING CROSSING PANELS AT MILPITAS (UPRR FORCES)
   - DEMOLITION OF EXISTING BRIDGE (CONTRACTOR)
   - GRADING, EXCAVATION, AND BEDDING FOR PROPOSED CULVERT (CONTRACTOR)
   - INSTALLATION OF PROPOSED CULVERT, INCLUDING SEALS, CONNECTIONS, JOINTS, ETC. (CONTRACTOR)
   - BACKFILL/COMPACTION OVER CULVERT AND ADJACENT CREEK EMBANKMENTS (CONTRACTOR)
   - INSTALLATION OF TRACK PANEL/TIES OVER CULVERT (UPRR FORCES)
   - INSTALLATION OF NEW/REPLACEMENT AT-GRADE CROSSING PANELS AT MILPITAS (UPRR FORCES)
   - RE-CONNECT SIGNALS FOR MILPITAS CROSSING (UPRR FORCES)
   - RESTRIPE STREET TO MATCH EXISTING STRIPING, EXCEPT LIMIT LINES SHALL BE 24" WIDE WHITE STRIPES (UPRR FORCES)
4. SEE UPRR STD DWG 0308 FOR GENERAL SPECIFICATIONS FOR ROAD CROSSINGS WITH CONCRETE PANELS.
5. CONCRETE PANELS WILL BE SPECIAL ORDER TO ACCOMMODATE 15'00'00" CURVATURE.
6. SEE SHEET RP-02 FOR TRACK GEOMETRY DATA.

REMOVAL NOTES:
1. REMOVE AC PAVEMENT
2. SAWCUT LINE
3. REMOVE SIDEWALK
4. REMOVE CURB & GUTTER

CONSTRUCTION NOTES:
1. PROTECT IN PLACE
2. INSTALL 10" FULL DEPTH AC PAVEMENT OVER TRACK ROADBED, PER TYPICAL GRADE CROSSING SECTION ON RP-03.
3. INSTALL CONCRETE CROSSING PANELS PER UPRR STD DWG 0304H

TRACK LEGEND:
- EXISTING TRACK
- PROPOSED TRACK
- RESURFACE TRACK

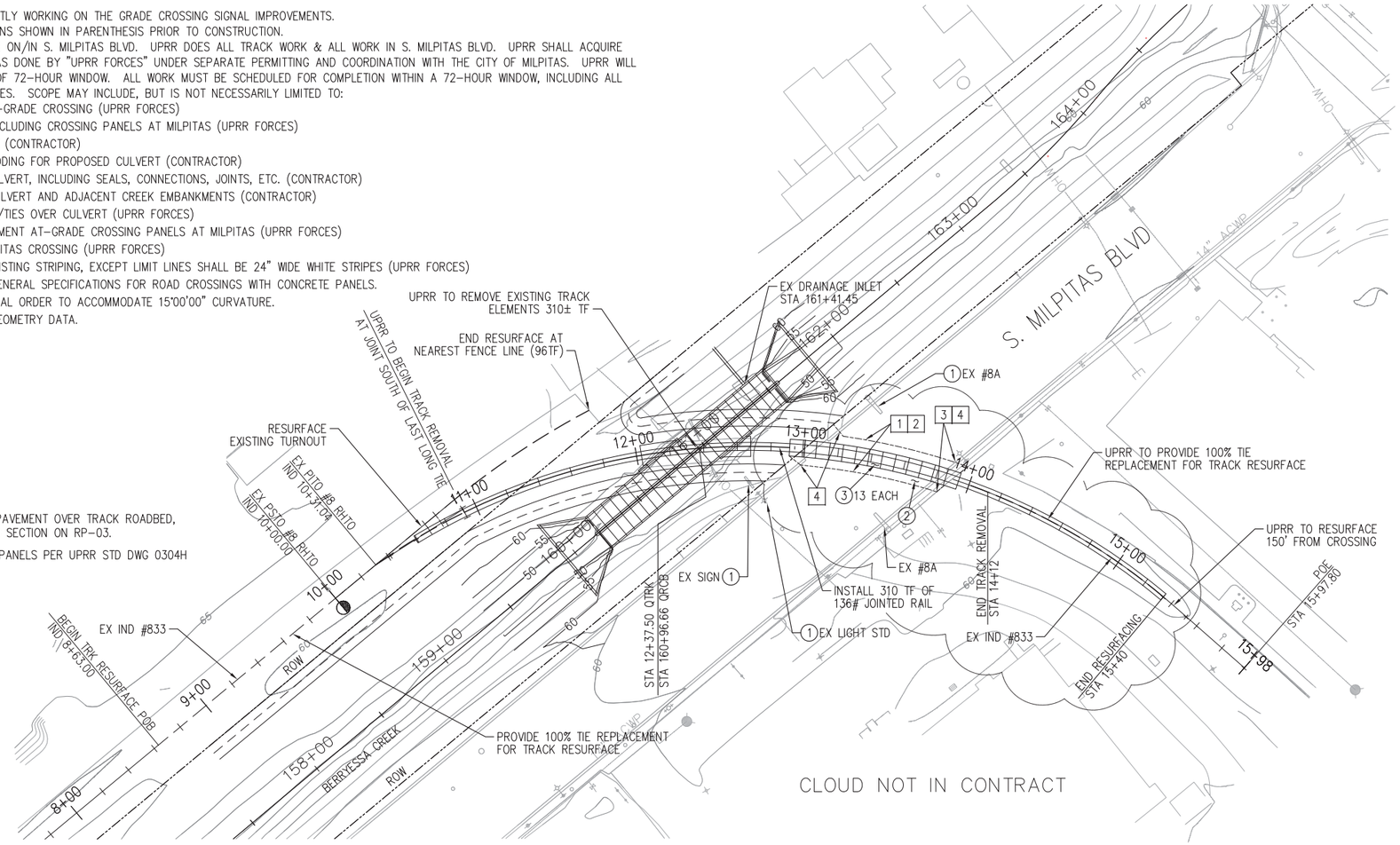

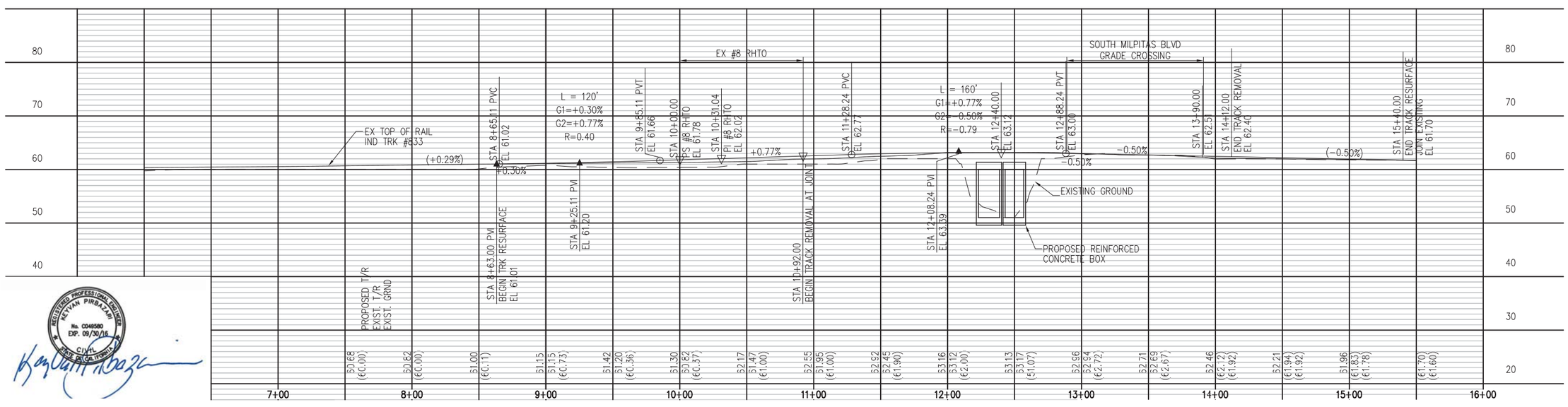

ABBREVIATIONS

AC	ASPHALT CONCRETE
ATR	ABOVE TOP OF RAIL
ALIGN.	ALIGNMENT
BBR	BELOW BASE OF RAIL
BR.	BRIDGE
CL	CENTERLINE
CNTRS.	CENTERS
CULV.	CULVERT
CWR	CONTINUOUS WELDED RAIL
EOT	END OF TRACK
GRND	GROUND
IND	INDUSTRY
JTD.	JOINTED RAIL
MAX.	MAXIMUM
MIN.	MINIMUM
MP	MILE POST
NO.	NUMBER
NSC	NOT SUFFICIENT CLEARANCE
OTM	OTHER TRACK MATERIAL
PC	POINT OF CURVE
POC	POINT ON CURVE
PF	1/2" POINT OF FROG
PI	POINT OF INTERSECTION
PITO	POINT OF INTERSECTION OF TURNOUT
PT	POINT OF TANGENT
POB	POINT OF BEGINNING
POE	POINT OF END
POT	POINT ON TANGENT
PSTO	POINT OF SWITCH AT TURNOUT
PVC	POINT OF VERTICAL CURVE
PVI	POINT OF VERTICAL INTERSECTION
PVT	POINT OF VERTICAL TANGENT
R	RADIUS
RCB	REINFORCED CONCRETE BOX
RCP	REINFORCED CONCRETE PIPE
RHTO	RIGHT HAND TURN OUT
RR	RAILROAD
R/W	RIGHT-OF-WAY
SH	SECOND HAND
STA.	STATION
STD.	STANDARD
ST.	STREET
TC	TRACK CENTERS
TF	TRACK FEET
TRK.	TRACK
T/R	TOP OF RAIL

REGISTERED PROFESSIONAL ENGINEER KEYVAN PIRBAZARI No. C049580 EXP. 09/30/16 CIVIL STATE OF CALIFORNIA

US Army Corps of Engineers
San Francisco District
1455 Market Street
San Francisco, CA 94103

TETRA TECH
17885 VON KARMAN AVE.,
SUITE 500
IRVINE, CA 92614
Phone: (949) 809-5000

Mark	Description	Date	Appr.

DESIGNED BY: EL | CHECKED BY: LP | DRAWN BY: PZ
DATE: 08/04/16 | SHEET NO. 57 of 71 | DRAWING NO.
PREPARED UNDER THE DIRECTION OF JOHN C. MORROW LT. COLONEL, C.E., DISTRICT COMMANDER

SUBMITTED: Chief, Civil Design Section
APPROVAL RECOMMENDED: Chief, Engineering Branch
APPROVED: Chief, Engineering & Technical Services

SANTA CLARA COUNTY, CALIFORNIA
UPPER BERRYESSA CREEK FLOOD RISK MANAGEMENT PROJECT
UPRR PLAN & PROFILE

Sheet reference number RP-01

CONFORMED DRAWING

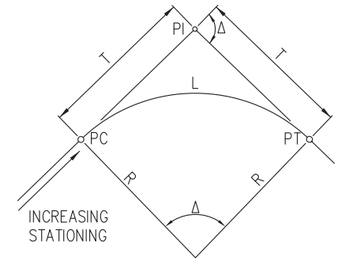

FIGURE A
SIMPLE CIRCULAR CURVE

R = RADIUS OF CIRCULAR CURVE

Δ = CENTRAL ANGLE OF CIRCULAR CURVE

$Dc = 2 \sin^{-1}(50/R)$ = DEGREE OF CURVE (CHORD DEFINITION)

$T = R \tan \frac{\Delta}{2}$ $= \frac{\Delta}{Dc} L \times 100$

CURVE
Dc=15°
V=10 MPH
Ea=0
Lc=434.37

BERRYESSA CREEK TRACK GEOMETRY DATA

CURVE NO.	DESC	BEARING	DISTANCE	STATION	NORTHING	EASTING	Dc	RADIUS	Δ	L
	POB			8+63.00	1976501.845	6158874.324				
		S11°48'12"E	168.04							
	PI			10+31.04	1976337.495	6158908.660				
		S04°39'29"E	10.38							
	TS			10+41.42	1976327.151	6158909.503				
			18.00							
#	PC/SC			10+59.42	1976309.200	6158910.824				
	PI				1976035.634	6158926.655	15°00'00"	383.06	71°09'21"	474.37
	PT/CS			15+33.79	1975932.291	6158672.865				
			18.00							
	ST			15+51.79	1975925.765	6158656.090				
		S69°11'24"W	46.01							
	POE			15+97.80	1975909.419	6158613.082				

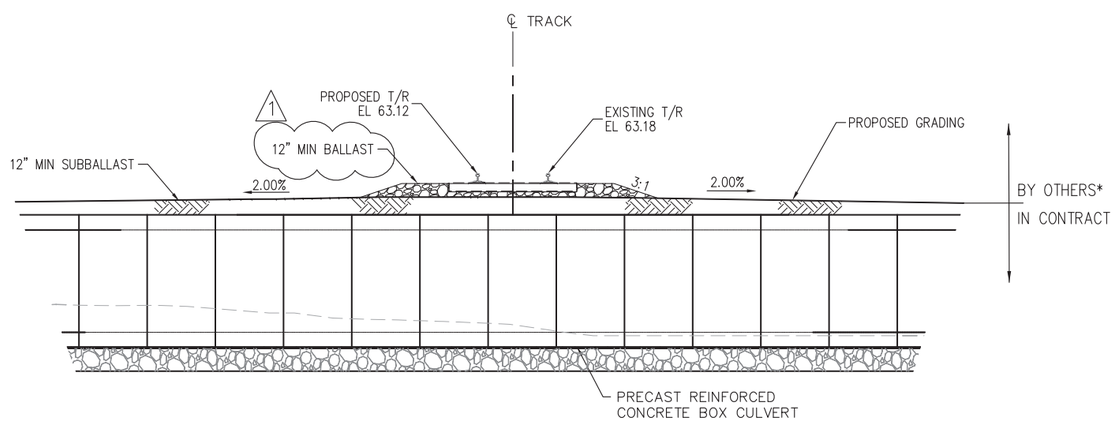

E
RP-02
BOX CULVERT SECTION
NOT TO SCALE

ALL WORK ASSOCIATED WITH UPRR TRACKAGE TO BE PERFORMED BY UPRR FORCES.

*WORK PERFORMED BY UPRR FORCES

REGISTERED PROFESSIONAL ENGINEER
KEYVAN PIRBAZARI
No. C049580
EXP. 09/30/16
CIVIL
STATE OF CALIFORNIA

US Army Corps of Engineers
San Francisco District
1455 Market Street
San Francisco, CA 94103

TETRA TECH
17885 VON KARMAN AVE.,
SUITE 500
IRVINE, CA 92614
Phone: (949) 809-5000

Mark	Description	Date	Appr.
1	BALLAST CALLOUT REVISED	07/06/16	

DESIGNED BY: EL
CHECKED BY: LP
DRAWN BY: PZ
DATE: 08/04/16
SHEET NO. 58 of 71
DRAWING NO.

SUBMITTED:
Chief, Civil Design Section
APPROVAL RECOMMENDED:
Chief, Engineering Branch
APPROVED:
Chief, Engineering & Technical Services

PREPARED UNDER THE DIRECTION OF
JOHN C. MORROW
LT. COLONEL, C.E., DISTRICT COMMANDER

SANTA CLARA COUNTY, CALIFORNIA
UPPER BERRYESSA CREEK FLOOD RISK MANAGEMENT PROJECT
UPRR TRACK
DETAILS & SECTIONS

Sheet reference number
RP-02

CONFORMED DRAWING

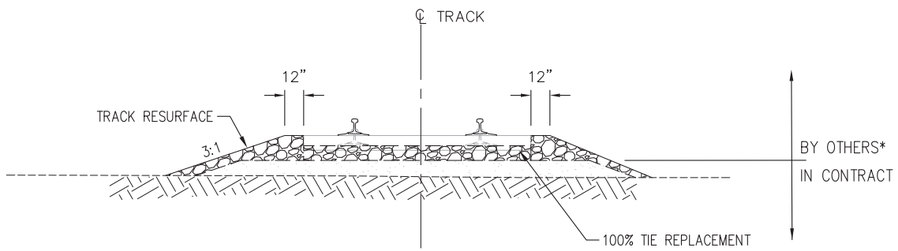

TYPICAL CROSS SECTION
8+63 TO 10+92
13+91 TO 15+40

NOT TO SCALE

ALL WORK ASSOCIATED WITH UPRR TRACKAGE
TO BE PERFORMED BY UPRR FORCES.

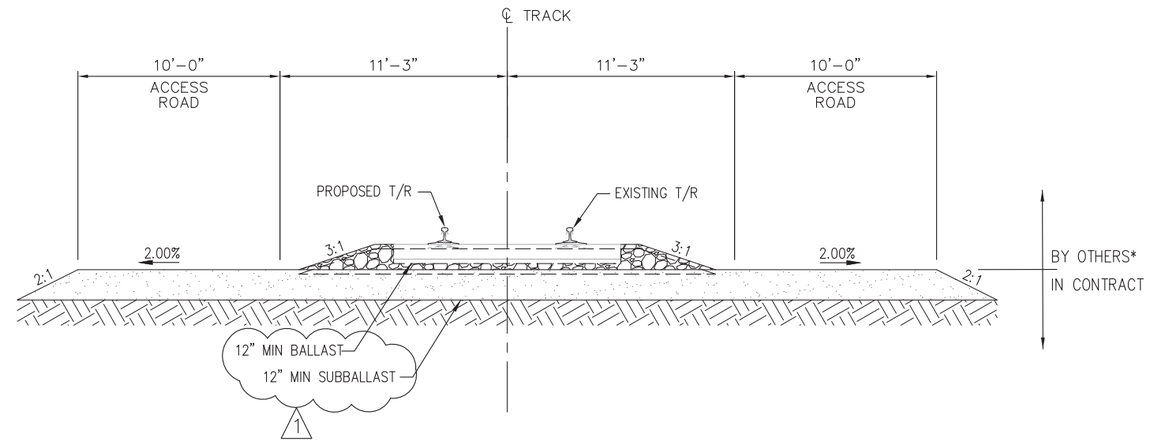

TYPICAL CROSS SECTION
10+92 TO 12+90

NOT TO SCALE

ALL WORK ASSOCIATED WITH UPRR TRACKAGE
TO BE PERFORMED BY UPRR FORCES.

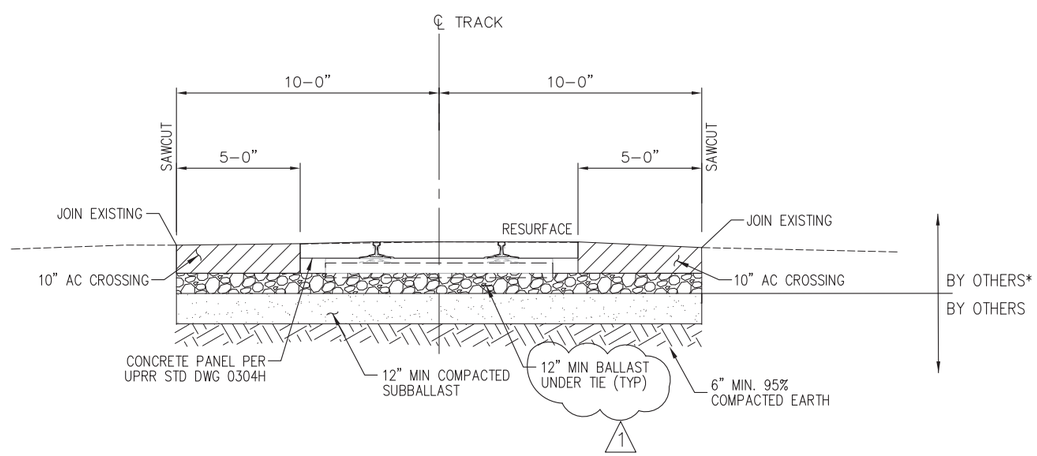

TYPICAL GRADE CROSS SECTION
12+90 TO 13+91

NOT TO SCALE

ALL WORK ASSOCIATED WITH UPRR TRACKAGE
TO BE PERFORMED BY UPRR FORCES.

*WORK PERFORMED BY UPRR FORCES

REGISTERED PROFESSIONAL ENGINEER
KEYVAN PIRBAZARI
No. C049580
EXP. 09/30/16
CIVIL
STATE OF CALIFORNIA

US Army Corps of Engineers
San Francisco District
1455 Market Street
San Francisco, CA 94103

TETRA TECH
17885 VON KARMAN AVE.,
SUITE 500
IRVINE, CA 92614
Phone: (949) 809-5000

Mark	Description	Date	Appr.
1	BALLAST CALLOUTS REVISED	07/06/16	

SUBMITTED:
Chief, Civil Design Section
APPROVAL RECOMMENDED:
Chief, Engineering Branch
APPROVED:
Chief, Engineering & Technical Services

DESIGNED BY: EL
DATE: 08/04/16
CHECKED BY: LP
SHEET NO. 59 of 71
DRAWN BY: PZ
DRAWING NO.

PREPARED UNDER THE DIRECTION OF
JOHN C. MORROW
LT. COLONEL, C.E., DISTRICT COMMANDER

SANTA CLARA COUNTY, CALIFORNIA
UPPER BERRYESSA CREEK FLOOD RISK MANAGEMENT PROJECT

UPRR TYPICAL TRACK CROSS SECTIONS

Sheet reference number
RP–03

P:\Wats\T33419.01 Berryessa 100% Design USACE\4 Closeout\Conformed Plans\Wet Stamp\Railroad\d39202e3-0673-4801-b2c0-2c4567b288e9\17 17504_RP03.dwg 04 Aug 2016 - 9:08am

CONFORMED DRAWING

TRAFFIC PLAN LAYOUT NOTES

1. NO LANE CLOSURE
2. FLAGMAN REQUIRED DURING CONSTRUCTION HOURS
3. CONSTRUCTION EXIT ONLY
4. NO OVERNIGHT PARKING CLOSURE
5. NO PARKING BETWEEN 7:00 AM TO 6:00 PM
6. NO CROSSING OF RAILROAD TRACKS WITHOUT UPRR FLAGMAN
7. BIKE LANE AND SIDEWALK CLOSURE
8. ROADWAY SHOULDER CLOSURE (MAINTAIN 1 LANE IN EACH DIRECTION)
9. LANE AND ROADWAY SHOULDER CLOSURE (MAINTAIN 1 LANE IN EACH DIRECTION)

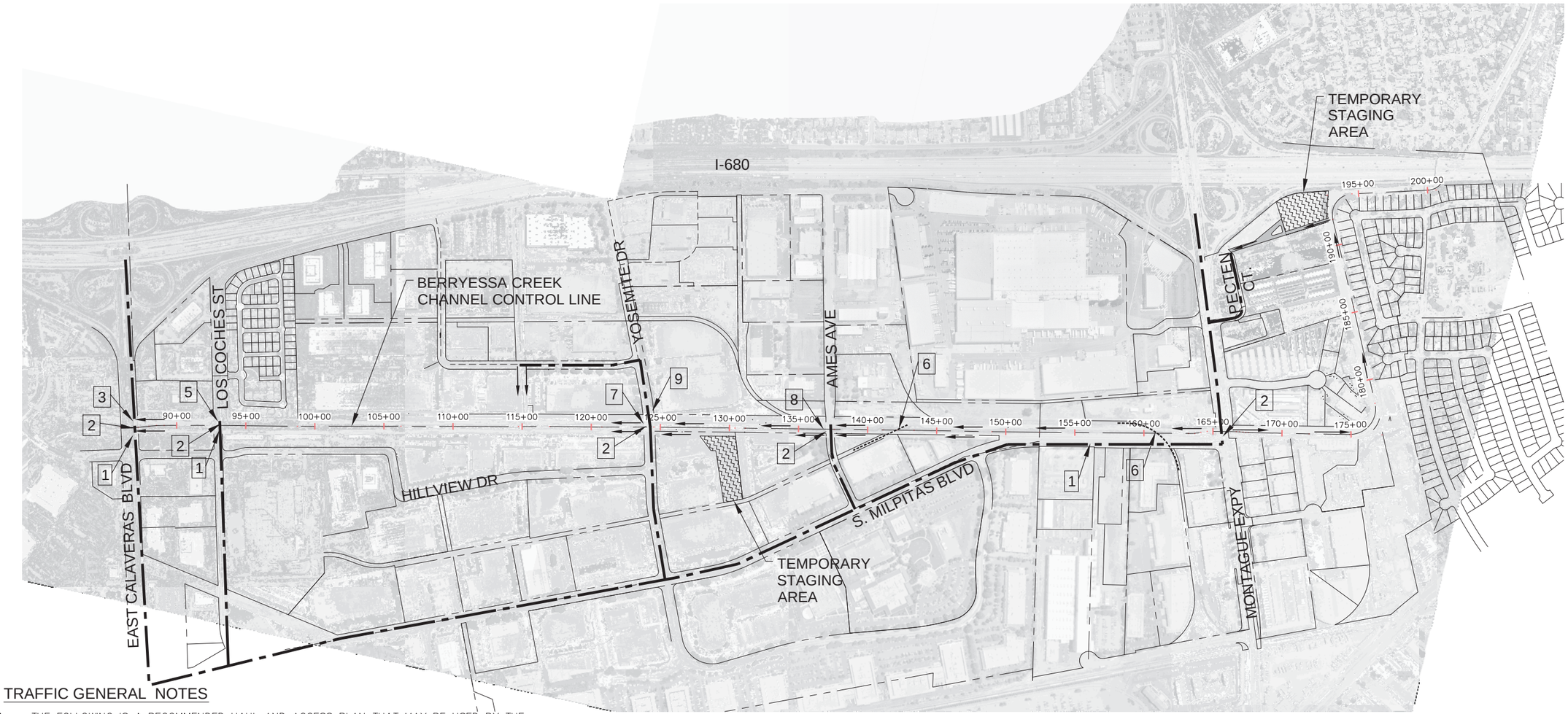

TRAFFIC GENERAL NOTES

1. THE FOLLOWING IS A RECOMMENDED HAUL AND ACCESS PLAN THAT MAY BE USED BY THE CONTRACTOR. THE CONTRACTOR WILL NEED TO SUBMIT A SIGNED AND STAMPED TEMPORARY TRAFFIC CONTROL PLAN FOR APPROVAL PRIOR TO THE START OF CONSTRUCTION.
2. NO EQUIPMENT OR MATERIAL STORAGE SHALL BE PERMITTED ON A CITY OF MILPITAS STREETS OR WITHIN CITY RIGHT OF WAY.
3. CONSTRUCTION WITHIN THE CITY OF MILPITAS IS LIMITED TO THE HOURS OF 7AM TO 7PM SEVEN DAYS A WEEK.
4. THE CONTACTOR SHALL OBTAIN A CITY OF MILPITAS ENCROACHMENT PERMIT PRIOR TO ANY WORK WITHIN THE CITY RIGHT OF WAY OR UPON CITY OWNED INFRASTRUCTURE.
5. ALL WORK TO CITY OWNED INFRASTRUCTURE SHALL BE IN ACCORDANCE WITH CITY OF MILPITAS STANDARDS.
6. CONTRACTOR TO COORDINATE MILPITAS BLVD. CLOSURE WITH MONTAGUE BRIDGE TRAFFIC CONTROL. K-RAIL TO BE INSTALLED AS REQUIRED DURING CONSTRUCTION.
7. ANY TRAFFIC CONTROL SET-UP MUST BE COORDINATED WITH THE COUNTY OF SANTA CLARA, CITY OF MIPITAS, SCVWD, UPRR, VTA, AND COUNTY CONTRACTOR'S OC JONES AND SONS.

LEGEND:

- RECOMMENDED CHANNEL ACCESS
- RECOMMENDED HAUL ROUTE
- UPRR TRAIN TRACK CROSSING
- TEMPORARY STAGING AREA

400 0 200 400 800

REGISTERED PROFESSIONAL ENGINEER ARIC TORREYSON NO. 66068 EXP. 6-30-18 CIVIL STATE OF CALIFORNIA

US Army Corps of Engineers
San Francisco District
1455 Market Street
San Francisco, CA 94103

TETRA TECH
17885 VON KARMAN AVE., SUITE 500
IRVINE, CA 92614
Phone: (949) 809-5000

Mark	Description	Date	Appr.

DESIGNED BY: AMT
CHECKED BY: YHC
DRAWN BY: AWG
DATE: 8-4-2016
SHEET NO. 60 of 71
DRAWING NO.

PREPARED UNDER THE DIRECTION OF JOHN C. MORROW LT. COLONEL, C.E., DISTRICT COMMANDER

SUBMITTED: Chief, Civil Design Section
APPROVAL RECOMMENDED: Chief, Engineering Branch
APPROVED: Chief, Engineering & Technical Services

SANTA CLARA COUNTY, CALIFORNIA
UPPER BERRYESSA CREEK FLOOD RISK MANAGEMENT PROJECT

TRAFFIC PLAN

Sheet reference number
T-100

CONFORMED DRAWING

LEGEND

HISTORICAL BORINGS

LATEST PROJECT BORINGS

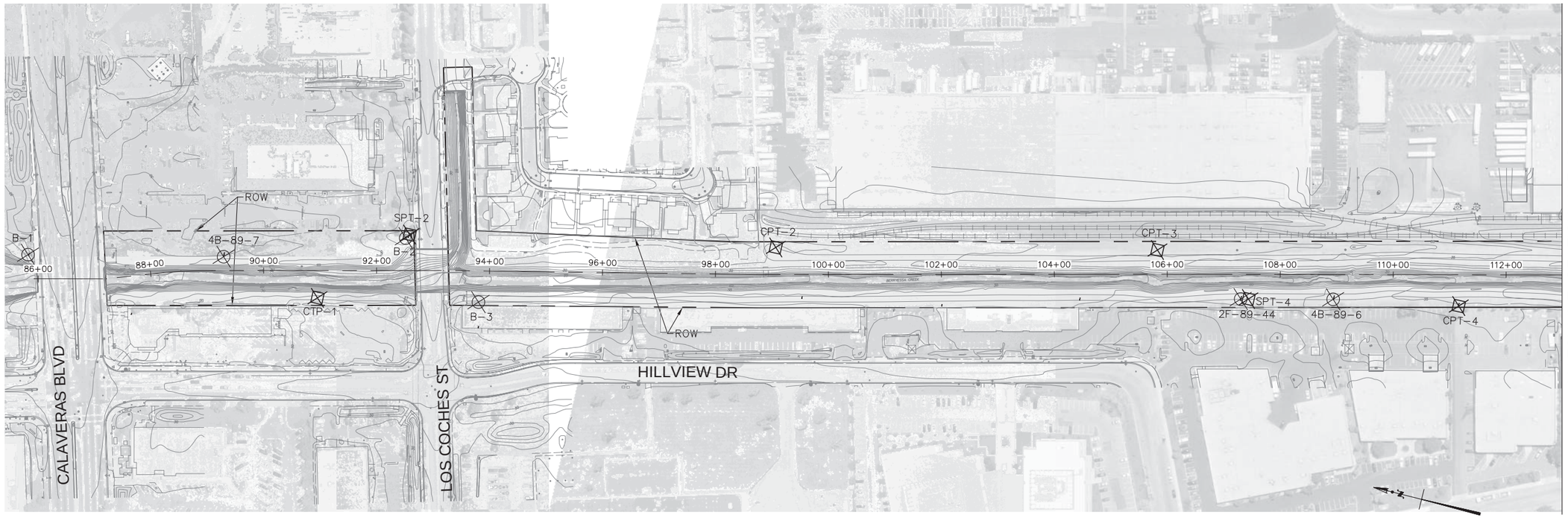

100 0 50 100 200

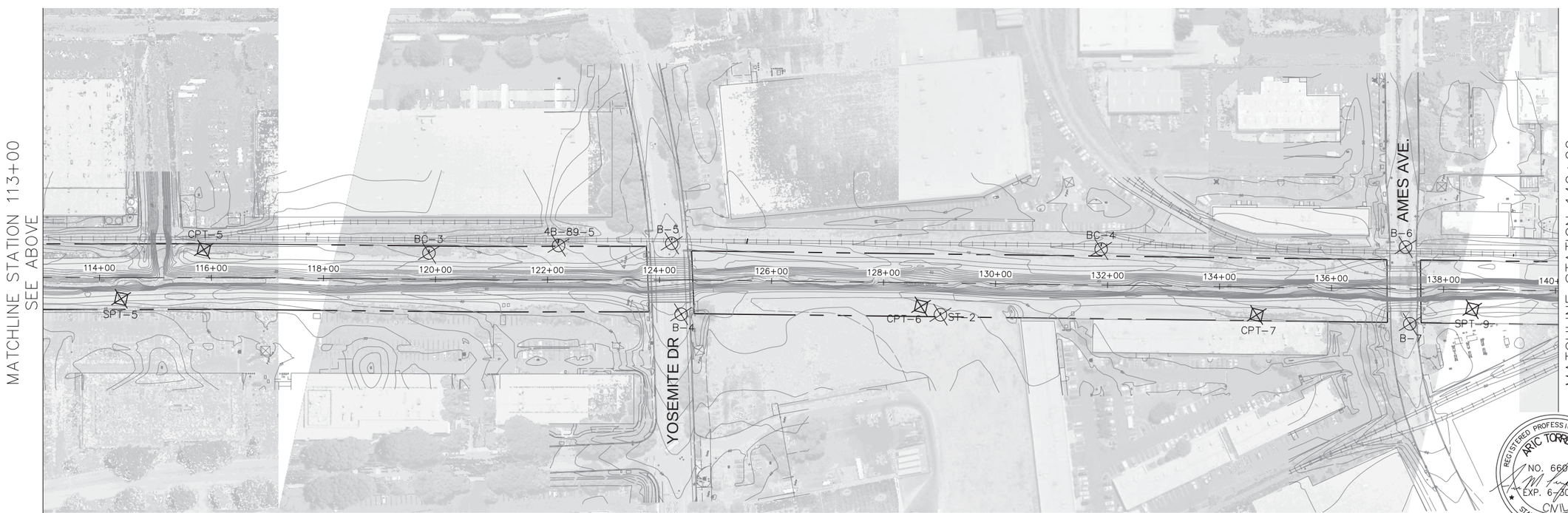

REGISTERED PROFESSIONAL ENGINEER
ARIC TORREYSON
NO. 66068
EXP. 6-30-18
CIVIL
STATE OF CALIFORNIA

US Army Corps of Engineers
San Francisco District
1455 Market Street
San Francisco, CA 94103

TETRA TECH
17885 VON KARMAN AVE.,
SUITE 500
IRVINE, CA 92614
Phone: (949) 809-5000

Mark	Description	Date	Appr.

DESIGNED BY: AMT
CHECKED BY: YHC
DRAWN BY: AWG
DATE: 8-4-2016
SHEET NO. 61 of 71
DRAWING NO.

SUBMITTED:
Chief, Civil Design Section
APPROVAL RECOMMENDED:
Chief, Engineering Branch
APPROVED:
Chief, Engineering & Technical Services

PREPARED UNDER THE DIRECTION OF
JOHN C. MORROW
LT. COLONEL, C.E., DISTRICT COMMANDER

SANTA CLARA COUNTY, CALIFORNIA
UPPER BERRYESSA CREEK FLOOD RISK MANAGEMENT PROJECT

GEOTECHNICAL BORING LOCATION – STA. 87+21.43 TO STA. 140+00.00

Sheet reference number
B-100

P:\Wat\T31331 Berryessa Design SC\WD\11 Design\01 Final Design\Sheets\ B-100.dwg 02 Aug 2016 - 5:11pm

CONFORMED DRAWING

LEGEND

HISTORICAL BORINGS

LATEST PROJECT BORINGS

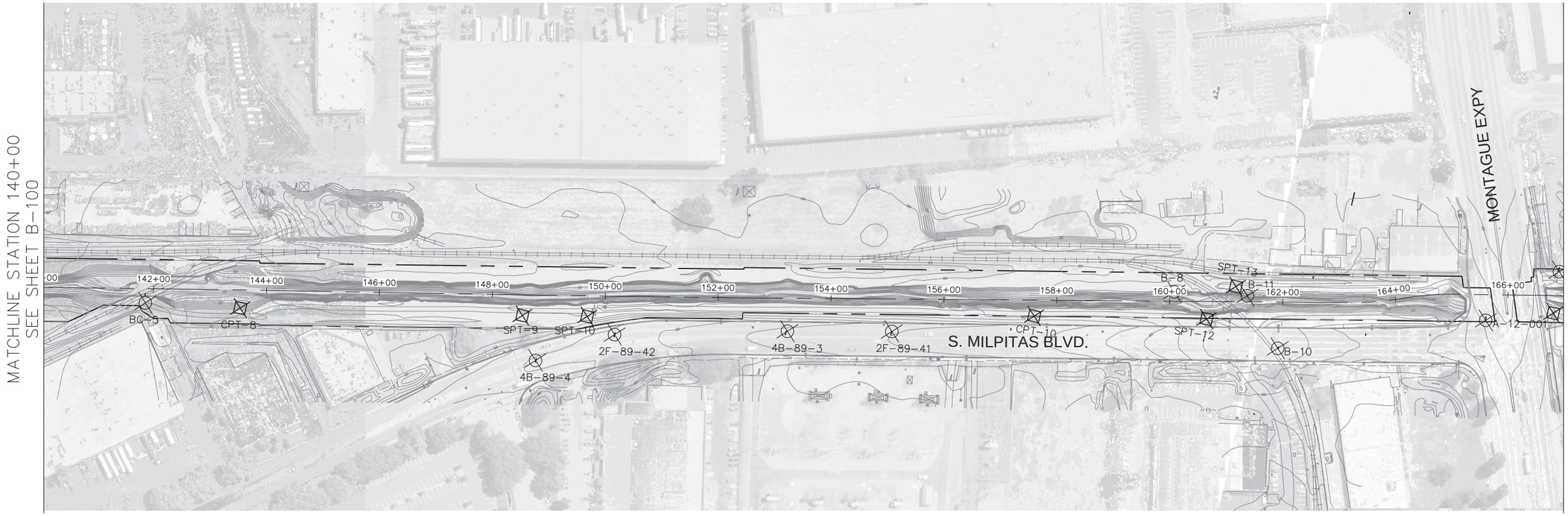

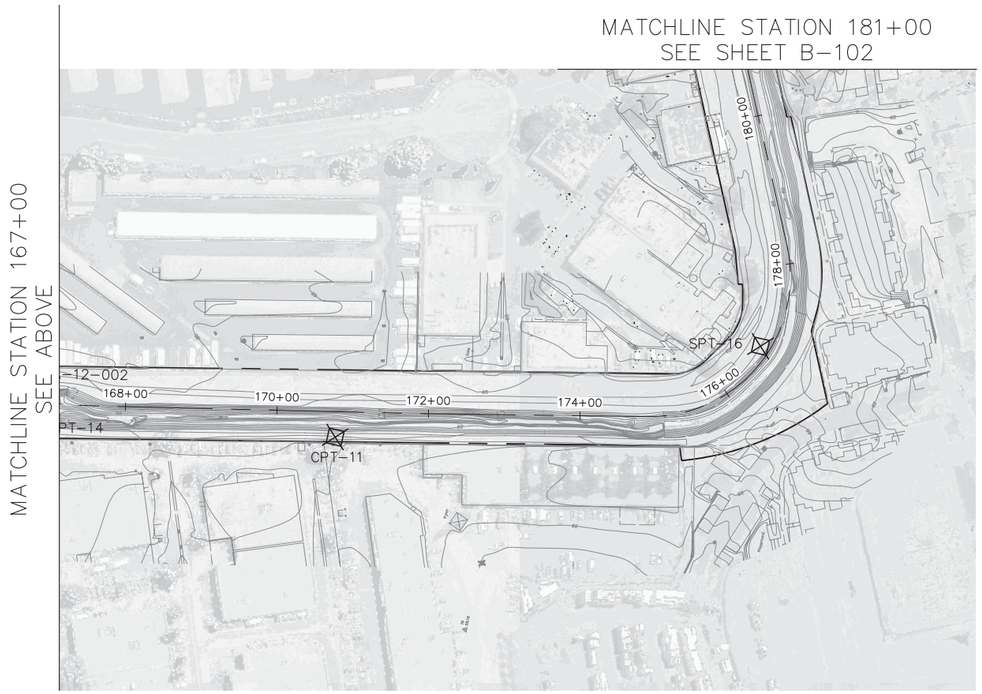

100 0 50 100 200

REGISTERED PROFESSIONAL ENGINEER
ARIC TORREYSON
NO. 66068
EXP. 6-30-18
CIVIL
STATE OF CALIFORNIA

US Army Corps of Engineers
San Francisco District
1455 Market Street
San Francisco, CA 94103

TETRA TECH
17885 VON KARMAN AVE.,
SUITE 500
IRVINE, CA 92614
Phone: (949) 809-5000

Mark	Description	Date	Appr.

DESIGNED BY: AMT
DATE: 8-4-2016
CHECKED BY: YHC
SHEET NO. 62 of 71
DRAWN BY: AWG
DRAWING NO.

SUBMITTED:
Chief, Civil Design Section
APPROVAL RECOMMENDED:
Chief, Engineering Branch
APPROVED:
Chief, Engineering & Technical Services

PREPARED UNDER THE DIRECTION OF
JOHN C. MORROW
LT. COLONEL, C.E., DISTRICT COMMANDER

SANTA CLARA COUNTY, CALIFORNIA
UPPER BERRYESSA CREEK FLOOD RISK MANAGEMENT PROJECT

GEOTECHNICAL BORING LOCATION – STA. 140+00.00 TO STA. 181+00.00

Sheet reference number
B-101

P:\Wat\T31331 Berryessa Design SCVWD\11 Design\01 Final Design\Sheets\ B-101.dwg 02 Aug 2016 - 5:14pm

CONFORMED DRAWING

LEGEND

HISTORICAL BORINGS

LATEST PROJECT BORINGS

MATCHLINE STATION 181+00
SEE SHEET B-101

100 0 50 100 200

REGISTERED PROFESSIONAL ENGINEER
ARIC TORREYSON
NO. 66068
EXP. 6-30-18
CIVIL
STATE OF CALIFORNIA

US Army Corps of Engineers
San Francisco District
1455 Market Street
San Francisco, CA 94103

TETRA TECH
17885 VON KARMAN AVE.,
SUITE 500
IRVINE, CA 92614
Phone: (949) 809-5000

Mark	Description	Date	Appr.

SUBMITTED:	DESIGNED BY: AMT	CHECKED BY: YHC	DRAWN BY: AWG
Chief, Civil Design Section	DATE: 8-4-2016	SHEET NO. 63 of 71	DRAWING NO.
APPROVAL RECOMMENDED:	PREPARED UNDER THE DIRECTION OF JOHN C. MORROW		
Chief, Engineering Branch			
APPROVED:	LT. COLONEL, C.E., DISTRICT COMMANDER		
Chief, Engineering & Technical Services			

SANTA CLARA COUNTY, CALIFORNIA
UPPER BERRYESSA CREEK FLOOD RISK MANAGEMENT PROJECT

GEOTECHNICAL BORING LOCATION – STA. 181+00.00 TO STA. 201+34.17

Sheet reference number
B-102

P:\Watr\T31331 Berryessa Design SC\VWD\11 Design\01 Final Design\Sheets\ B-102.dwg 02 Aug 2016 - 5:18pm

CONFORMED DRAWING

4 3 2

C B A

Project: **Upper Berryessa Creek**
Project Location: **Milpitas**
Project Number: **197-4552-0057 (TET 14-57E)**

Log of Boring SPT-2
Sheet 1 of 2

Date(s) Drilled **12/10/2014**	Logged By **AHM**	Checked By **DB**
Drilling Method **Hollow Stem Auger (HSA)**	Drill Bit Size/Type **6-inch**	Total Depth of Borehole **31.5 feet bgs**
Drill Rig Type **CME 75 Track Rig**	Drilling Contractor **Geo-Ex**	Approximate Surface Elevation **32.5 feet**
Groundwater Level and Date Measured **11.3 feet After Drilling (AD)**	Sampling Method(s) **Bulk, California, SPT**	Hammer Data **CME auto-trip, 140 lbs, 30-inch drop**
Borehole Backfill **Cement Bentonite Grout**	Location **Lat. 37.43243, Long. -121.8922**	

Elevation (feet)	Depth (feet)	Sample Type	Sample Number	Sampling Resistance, blows/ft	USCS Symbol	Graphic Log	MATERIAL DESCRIPTION	Water Content, %	Dry Unit Weight, pcf	REMARKS AND OTHER TESTS
32.5	0			38			[FILL] Levee Fill (af) Silty fine SAND; brown (7.5YR 3/4), damp, medium dense, trace of clay and gravel			VOC = 0.0ppm Max = 125.2pcf @10.1%
		SPT-2	11		CL		[NATIVE] Younger Alluvial Deposits (Qa) Sandy lean CLAY, brown (7.5YR 3/4), damp, medium dense, low plasticity	23.4		G/S/F / = 0/36/64
27.5	5	SK-1			CH		Fat CLAY, very dark gray (5YR 3/1), damp, stiff, calcium carbonate staining along partings, porous, high plasticity	29.1		VOC = 0.0ppm LL=76/PL=21/ PI=55
		SPT-3	14							
		SPT-4	5		CL		Silty CLAY, light yellow brown (10YR 6/4), moist, firm, low plasticity GW ATD	27.1		
22.5	10	SPT-5	3				Silty lean CLAY, light brown (7.5YR 6/3), wet, soft GW 15 mins. AD	28.8		VOC = 0.0ppm
		SPT-6	9				... light gray (10YR 7/2), wet, stiff	29.5		
17.5	15	SPT-7	12	SP-SC CL			Poorly graded SAND with Clay, brown (7.5YR 5/2), wet, medium dense Silty CLAY, brown (7.5YR 5/2), wet, stiff, low plasticity	19.7		VOC = 0.0ppm
		SPT-8	9				... trace of medium grained sand	19.8		
12.5	20	SPT-9	12	ML			[NATIVE] Older Alluvial Deposits (Qoa)? SILT, light yellowish brown (10YR 6/2), wet, stiff, trace of pea sized gravel	31.9		VOC = 0.0ppm
7.5	25	R-10	20		CL		Silty lean CLAY, light yellow brown to brown (10YR 6/3), wet, firm, low plasticity	33.4	94	Uncontrined Comp. Strength = 0.623 tsf

TETRA TECH

Project: **Upper Berryessa Creek**
Project Location: **Milpitas**
Project Number: **197-4552-0057 (TET 14-57E)**

Log of Boring SPT-2
Sheet 2 of 2

Elevation (feet)	Depth (feet)	Sample Type	Sample Number	Sampling Resistance, blows/ft	USCS Symbol	Graphic Log	MATERIAL DESCRIPTION	Water Content, %	Dry Unit Weight, pcf	REMARKS AND OTHER TESTS
7.5	25		SK-11	9	CL		Silty lean CLAY, light yellow brown to brown (10YR 6/3), wet, firm, low plasticity	22.9		VOC = 0.0ppm G/S/F = 0/42/58 LL=30/PL=15/ PI=15
2.5	30									
		R-12	10				as above	26.1	101	VOC = 0.0ppm
-2.5	35						Bottom of Boring at 31.5 feet bgs. Notes: Groundwater at 9 feet ATD. Groundwater at 11.3 feet 15 minutes after removing augers. No caving to TD.			
-7.5	40									
-12.5	45									
-17.5	50									
-22.5	55									

TETRA TECH

Project: **Upper Berryessa Creek**
Project Location: **Milpitas**
Project Number: **197-4552-0057 (TET 14-57E)**

Log of Boring SPT-4
Sheet 1 of 1

Date(s) Drilled **12/10/2014**	Logged By **AHM**	Checked By **DB**
Drilling Method **Hollow Stem Auger (HSA)**	Drill Bit Size/Type **6-inch**	Total Depth of Borehole **16.5 feet bgs**
Drill Rig Type **CME 75 Track Rig**	Drilling Contractor **Geo-Ex**	Approximate Surface Elevation **33.5 feet**
Groundwater Level and Date Measured **8.9 feet After Drilling (AD)**	Sampling Method(s) **Bulk, Modified California**	Hammer Data **CME auto-trip, 140 lbs, 30-inch drop**
Borehole Backfill **Cement Bentonite Grout**	Location **Lat. 37.42791, Long. -121.89112**	

Elevation (feet)	Depth (feet)	Sample Type	Sample Number	Sampling Resistance, blows/ft	USCS Symbol	Graphic Log	MATERIAL DESCRIPTION	Water Content, %	Dry Unit Weight, pcf	REMARKS AND OTHER TESTS
33.5	0				CL		[FILL] Levee Fill (af) Silty CLAY, brown (7.5YR 3/5), damp, trace of gravel, wood fragments, low plasticity			VOC = 0.0ppm EI = 79 Res = 1160 ohm-cm pH = 7.7 SO4 = 0.0092% Cl = 0.0025%
		SK-1								
28.5	5				CH		[NATIVE] Younger Alluvial Deposits (Qa) Fat CLAY, brown (7.5YR 5/3), damp to moist, very stiff, trace of silt, high plasticity			
		R-2	25					27.6	98	VOC = 0.0ppm CU Triaxial
							GW 30 mins. AD			
23.5	10				CL		Lean CLAY with Sand, very pale brown to very pale yellow (10YR 7/4), moist, stiff, wet, iron staining along partings, low plasticity GW ATD			
		SK-2	53					27.9	98	VOC = 0.0ppm G/S/F = 0/15/85 LL=44/PL=18/ PI=26 CU Triaxial
18.5	15				CH		Fat CLAY, light brown to gray brown (10YR 7/2), wet, stiff, caliche concretions, visible water, trace of fine sand, high plasticity			
		R-4	14					21.5	105	CU Triaxial
13.5	20						Bottom of boring at 16.5 feet bgs. Notes: Groundwater at 10.2 feet ATD. Groundwater at 8.9 feet 30 minutes after removing augers. No caving to TD.			
8.5	25									

TETRA TECH

Project: **Upper Berryessa Creek**
Project Location: **Milpitas**
Project Number: **197-4552-0057 (TET 14-57E)**

Log of Boring SPT-5
Sheet 1 of 1

Date(s) Drilled **12/10/2014**	Logged By **AHM**	Checked By **DB**
Drilling Method **Hollow Stem Auger (HSA)**	Drill Bit Size/Type **6-inch**	Total Depth of Borehole **15.5 feet bgs**
Drill Rig Type **CME 75 Track Rig**	Drilling Contractor **Geo-Ex**	Approximate Surface Elevation **36 feet**
Groundwater Level and Date Measured **12.5 feet After Drilling (AD)**	Sampling Method(s) **Bulk, Modified California**	Hammer Data **CME auto-trip, 140 lbs, 30-inch drop**
Borehole Backfill **Cement Bentonite Grout**	Location **Lat. 37.42623, Long. -121.89061**	

Elevation (feet)	Depth (feet)	Sample Type	Sample Number	Sampling Resistance, blows/ft	USCS Symbol	Graphic Log	MATERIAL DESCRIPTION	Water Content, %	Dry Unit Weight, pcf	REMARKS AND OTHER TESTS
36	0				CL		[FILL] Levee Fill (af) Silty CLAY with Sand, Brown (7.5YR 5/3), damp, low plasticity			VOC = 0.0ppm EI=56 Res = 1274 ohm-cm pH = 7.6 SO4 = 0.027% Cl = 0.0023% R-Value = 8
		SK-1								
31	5				CH		Sandy lean CLAY, dark grayish brown (10YR 4/2), damp to moist, stiff, low plasticity [NATIVE] Younger Alluvial Deposits (Qa) Fat CLAY, dark brown to yellowish brown (10YR 3/6), damp to moist, very stiff, high plasticity			
		R-2	25					31.6	92	VOC = 0.0ppm Consol u/d
26	10				CL		as above			
		R-3	29					24.9	101	VOC = 0.0ppm
							GW 25 mins. AD			
21	15	R-4	28				Silty lean CLAY, brown to light brown (7.5YR 6/3), moist, stiff to very stiff, low plasticity ... increase in silt, wet, visible moisture GW ATD	16.6	116	VOC = 0.0ppm
16	20						Bottom of boring at 15.5 feet bgs. Notes: Groundwater at 15.1 feet ATD. Groundwater at 12.5 feet 20 minutes after removing augers. No caving to TD.			
11	25									

TETRA TECH

Project: **Upper Berryessa Creek**
Project Location: **Milpitas**
Project Number: **197-4552-0057 (TET 14-57E)**

Log of Boring SPT-9
Sheet 1 of 1

Date(s) Drilled **12/10/2014**	Logged By **AHM**	Checked By **DB**
Drilling Method **Hollow Stem Auger (HSA)**	Drill Bit Size/Type **6-inch**	Total Depth of Borehole **16.5 feet bgs**
Drill Rig Type **CME 75 Track Rig**	Drilling Contractor **Geo-Ex**	Approximate Surface Elevation **52 feet**
Groundwater Level and Date Measured **No GW**	Sampling Method(s) **Bulk, Modified California**	Hammer Data **CME auto-trip, 140 lbs, 30-inch drop**
Borehole Backfill **Cement Bentonite Grout**	Location **Lat. 37.42623, Long. -121.89061**	

Elevation (feet)	Depth (feet)	Sample Type	Sample Number	Sampling Resistance, blows/ft	USCS Symbol	Graphic Log	MATERIAL DESCRIPTION	Water Content, %	Dry Unit Weight, pcf	REMARKS AND OTHER TESTS
52	0		SK-1		SM		[FILL] Levee Fill (af) Silty SAND with Gravel, dark brown to brown (7.5YR 4/4), damp			VOC = 0.0ppm MAX = 124.4pcf @11.0%
47	5									
		R-2	28				... gravel up to 1/4 inch, damp, medium dense			VOC = 0.0ppm
				SP-SC			[NATIVE] Younger Alluvial Deposits (Qa) Poorly graded SAND with Silt and Gravel, dark grayish brown (10YR 4/2), moist, medium dense	9.6	114	G/S/F = 46/55/8 k = 1.10E-03 cm/sec
42	10									
		R-3	14					26.5	97	VOC = 0.0ppm G/S/F = 3/41/56 LL=34/PI=14/ PI=20 UCS = 0.721tsf
					CL		Sandy lean CLAY, brown to light brownish gray (10YR 6/2), damp to moist, stiff, low plasticity			
37	15				CH		Fat CLAY, grayish brown (10YR 6/2-5/2), moist, stiff, trace of pea sized gravel, high plasticity			
		R-4	29					31.9	91	VOC = 0.0ppm
32	20						Bottom of boring at 16.5 feet bgs. Notes: No Groundwater ATD. No Groundwater 30 minutes after removing augers. Hole stayed open to TD.			
27	25									

TETRA TECH

Project: **Upper Berryessa Creek**
Project Location: **Milpitas**
Project Number: **197-4552-0057 (TET 14-57E)**

Log of Boring SPT-10
Sheet 1 of 2

Date(s) Drilled **12/10/2014**	Logged By **AHM**	Checked By **DB**
Drilling Method **Hollow Stem Auger (HSA)**	Drill Bit Size/Type **6-inch**	Total Depth of Borehole **30 feet bgs**
Drill Rig Type **CME 75 Track Rig**	Drilling Contractor **Geo-Ex**	Approximate Surface Elevation **58 feet**
Groundwater Level and Date Measured **14.4 feet After Drilling (AD)**	Sampling Method(s) **Bulk, Modified California, SPT**	Hammer Data **CME auto-trip, 140 lbs, 30-inch drop**
Borehole Backfill **Cement Bentonite Grout**	Location **Lat. 37.41699, Long. -121.88795**	

Elevation (feet)	Depth (feet)	Sample Type	Sample Number	Sampling Resistance, blows/ft	USCS Symbol	Graphic Log	MATERIAL DESCRIPTION	Water Content, %	Dry Unit Weight, pcf	REMARKS AND OTHER TESTS
53	0		SK-1		SM		[FILL] Levee Fill (af) Silty fine SAND, dark grayish brown (2.5YR 5/7), damp, medium dense, trace of gravel			VOC = 0.0ppm
		SPT-2	17		SC		[NATIVE] Younger Alluvial Deposits (Qa) Clayey SAND, light brownish gray (10YR 6/2), damp, medium dense, trace of gravel	19.1		G/S/F = 12/50/38 LL=35/PL=16/ PI=19
48	5	SPT-3	16		SM		Silty fine SAND, light brown (7.5YR 6/4), damp, medium dense, roots	21.7		VOC = 0.0ppm
		R-4	28					13.5	106	
43	10	SPT-5	10		ML		Silt, 5" medium brown to yellow brown (10YR 5/4), damp, stiff, low plasticity			VOC = 0.0ppm
		SPT-6	16		SM		Silty fine SAND, brown (10YR 5/3), moist, medium dense, trace of sand GW AD	19.9		
38	15	SPT-7	11		ML		Silty CLAY, olive to olive brown (5Y 5/3), moist, stiff, low plasticity	24.2		VOC = 0.0ppm
		R-8	10		CH		Fat CLAY, dark grayish brown (10YR 4/2), moist, stiff, high plasticity GW ATD	27.5	94	CU Triaxial
33	20	R-9	19				as above	21.9	99	VOC = 0.0ppm CU Triaxial
		SPT-10	12		CL		[NATIVE] Older Alluvial Deposits (Qoa) Sandy lean CLAY, light yellowish brown (10YR 6/4), wet, stiff, low plasticity	22.1		G/S/F = 1/44/55 LL=37/PL=16/ PI=21
28	25									

TETRA TECH

US Army Corps of Engineers
San Francisco District
1455 Market Street
San Francisco, CA 94103

TETRA TECH
17885 VON KARMAN AVE., SUITE 500
IRVINE, CA 92614
Phone: (949) 809-5000

Mark	Description	Date	Appr.

DESIGNED BY: AMT | CHECKED BY: YHC | DRAWN BY: AWG
DATE: 8-4-2016 | SHEET NO. 64 of 71 | DRAWING NO.

SUBMITTED:
Chief, Civil Design Section APPROVAL RECOMMENDED:
Chief, Engineering Branch APPROVED:

PREPARED UNDER THE DIRECTION OF
JOHN C. MORROW
LT. COLONEL, C.E., DISTRICT COMMANDER
Chief, Engineering & Technical Services

REGISTERED PROFESSIONAL ENGINEER
ARIC TORRESON
NO. 66068
EXP. 6-30-18
CIVIL
STATE OF CALIFORNIA

SANTA CLARA COUNTY, CALIFORNIA
UPPER BERRYESSA CREEK FLOOD RISK MANAGEMENT PROJECT

GEOTECHNICAL BORING LOG

Sheet reference number
B-103

CONFORMED DRAWING

Project: Upper Berryessa Creek
Project Location: Milpitas
Project Number: 197-4552-0057 (TET 14-57E)

Log of Boring SPT-10
Sheet 2 of 2

Elevation (feet)	Depth (feet)	Sample Type	Sample Number	Sampling Resistance, blows/ft	USCS Symbol	Graphic Log	MATERIAL DESCRIPTION	Water Content, %	Dry Unit Weight, pcf	REMARKS AND OTHER TESTS
			SPT-11	14			Sandy lean CLAY, light yellowish brown (10YR 6/4), wet, stiff, medium plasticity	26.7		VOC = 0.0ppm
			R-12	20			... pale yellow (5Y 8/2), wet, very stiff, trace of sand	20.3	110	VOC = 0.0ppm
							Bottom of boring at 30 feet bgs.			

Notes:
Groundwater at 18 feet ATD.
Groundwater at 14.4 feet 30 minutes after removing augers.
No caving to TD.

TETRA TECH

Project: Upper Berryessa Creek
Project Location: Milpitas
Project Number: 197-4552-0057 (TET 14-57E)

Log of Boring SPT-12
Sheet 1 of 3

Date(s) Drilled 12/10/2014	Logged By AHM	Checked By DB
Drilling Method Hollow Stem Auger (HSA)	Drill Bit Size/Type 6-inch	Total Depth of Borehole 61.5 feet bgs
Drill Rig Type CME 75 Track Rig	Drilling Contractor Geo-Ex	Approximate Surface Elevation 61 feet
Groundwater Level and Date Measured 14.8 feet After Drilling (AD)	Sampling Method(s) Bulk, Modified California, SPT	Hammer Data CME auto-trip, 140 lbs, 30-inch drop
Borehole Backfill Cement Bentonite Grout	Location Lat. 37.41383, Long. -121.88707	

Elevation (feet)	Depth (feet)	Sample Type	Sample Number	Sampling Resistance, blows/ft	USCS Symbol	Graphic Log	MATERIAL DESCRIPTION	Water Content, %	Dry Unit Weight, pcf	REMARKS AND OTHER TESTS
			SPT-1		SM		[FILL] Levee Fill (af) Silty SAND, brown (10YR 5/3), damp, loose, trace of gravel, red brick fragments and rusted metal wire			VOC = 0.0ppm MAX = 130.8pcf @7.8% Res = 488 ohm-cm pH = 7.3 SO4 = 0.056% Cl = 0.0084% G/S/F = 7/46/47
			SPT-2	7				11.6		
					SM/SP		[NATIVE] Younger Alluvial Deposits (Qa) Clayey SAND with Silt and Sand, grayish brown (10YR 5/2), damp, loose			
	5		R-3	14			pin-hole porous, root casts	14.7	110	VOC = 0.0ppm
			SPT-4	5		SC	Clayey SAND, light to brown to brown (10YR 5/3), wet, soft	18.2		G/S/F = 5/61/3
	10		R-5	10		CL-ML	CLAYEY SILT with Sand, light brown (7.5YR 6/3) moist, firm, trace of sand, low plasticity	29.3	90	VOC = 0.0ppm DS u/d @ 1, 2, 3ksf
			SPT-6	9		CL	Silty to sandy lean CLAY, olive brown to brown (7.5YR 5/3), moist, firm, low plasticity	26.5		EI=58
	15		R-7	13		SM	Silty fine SAND, gray to olive brown (5Y 5/4), moist, loose, caliche staining along partings GW 30 mins AD	26.9	90	VOC = 0.0ppm
			SPT-8	3		CL	Silty CLAY, grayish brown (10YR 5/2), wet, soft, low plasticity GW 1 hour AD GW ATD	31.1		Res = 1906 ohm-cm pH = 7.7 SO4 = 0.0032% Cl = 0.0022%
	20		R-9	9			as above	22.8	103	VOC = 0.0ppm Consol u/d
			SPT-10	11			as above	28.3		LL=44/PL=17/ PI=27
	25						stiff			
	30									

TETRA TECH

Project: Upper Berryessa Creek
Project Location: Milpitas
Project Number: 197-4552-0057 (TET 14-57E)

Log of Boring SPT-12
Sheet 2 of 3

Elevation (feet)	Depth (feet)	Sample Type	Sample Number	Sampling Resistance, blows/ft	USCS Symbol	Graphic Log	MATERIAL DESCRIPTION	Water Content, %	Dry Unit Weight, pcf	REMARKS AND OTHER TESTS
			SPT-11	13	CL		Silty CLAY, grayish brown (10YR 5/2), wet, soft, low plasticity	26.3		VOC = 0.0ppm
			SPT-12	13			... trace of silty fine sand			
			SPT-13	17			Sandy lean CLAY, light brown (10YR 6/4), wet, very stiff, low plasticity, visible 1-inch lense of wet sand	16.2		LL=33/PL=13/ PI=20
	5		SPT-14	9			... firm to stiff	19.2		VOC = 0.0ppm
	10		SPT-15	15			... light grayish to light brown (7.5YR 6/3), wet, stiff, trace of fine sand	31.2		LL=32/PL=16/ PI=16
					ML		[NATIVE] Older Alluvial Deposits (Qoal)? Sandy SILT, brown to light brown (7.5YR 5/4), wet, stiff, pin-hole porous, caliche staining along partings, possible older alluvium			
	15		SPT-16	11				22.9		VOC = 0.0ppm
					CH		Fat CLAY, brown (7.5YR 5/4), wet, firm, high plasticity			
	20		SPT-17	4				23.7		VOC = 0.0ppm

TETRA TECH

Project: Upper Berryessa Creek
Project Location: Milpitas
Project Number: 197-4552-0057 (TET 14-57E)

Log of Boring SPT-12
Sheet 3 of 3

Elevation (feet)	Depth (feet)	Sample Type	Sample Number	Sampling Resistance, blows/ft	USCS Symbol	Graphic Log	MATERIAL DESCRIPTION	Water Content, %	Dry Unit Weight, pcf	REMARKS AND OTHER TESTS
			SPT-11	13	CH		Fat CLAY, brown (7.5YR 5/4), wet, stiff, high plasticity	28.7		VOC = 0.0ppm
			SPT-12	9			as above	21.4		VOC = 0.0ppm

Bottom of boring at 61.5 feet bgs.

Notes:
Groundwater at 17.5 feet ATD.
Groundwater at 14.8 and 16 feet 30 minutes and 1 hour after removing augers.

Hole caved between 56 feet and TD after pulling augers.

TETRA TECH

Project: Upper Berryessa Creek
Project Location: Milpitas
Project Number: 197-4552-0057 (TET 14-57E)

Log of Boring SPT-13
Sheet 1 of 3

Date(s) Drilled 12/11/2014	Logged By AHM	Checked By DB
Drilling Method Hollow Stem Auger (HSA)	Drill Bit Size/Type 6-inch	Total Depth of Borehole 61.5 feet bgs
Drill Rig Type CME 75	Drilling Contractor Geo-Ex	Approximate Surface Elevation 62 feet
Groundwater Level and Date Measured 17.2 feet After Drilling (AD)	Sampling Method(s) Bulk, Modified California, SPT	Hammer Data CME auto-trip, 140 lbs, 30-inch drop
Borehole Backfill Cement Bentonite Grout	Location Lat. 37.41381, Long. -121.88684	

Elevation (feet)	Depth (feet)	Sample Type	Sample Number	Sampling Resistance, blows/ft	USCS Symbol	Graphic Log	MATERIAL DESCRIPTION	Water Content, %	Dry Unit Weight, pcf	REMARKS AND OTHER TESTS
			SPT-1		SM		[FILL] Levee Fill (af) Silty SAND with gravel, brown (7.5YR 3/4), damp, medium dense, concrete and red brick fragments			Res = 910 ohm-cm pH = 7.7 SO4 = 0.0124% Cl = 0.0038% LL=33/PL=16/ PI=17 G/S/F = 2/37/61 k = 3.643E-06 cm/sec LL=45/PL=17/ PI=28
			SPT-2	10	CL		[NATIVE] Younger Alluvial Deposits (Qa) Sandy lean CLAY, medium brown to light brown (7.5YR 5/2), damp, stiff, trace of pea sized gravel	16.4		
	5		R-3	15			as above	16.5	95	
			SPT-4	17			... gravel up to 1/4 inch, very stiff	16.2		DS u/d @ 1, 2, 3ksf G/S/F = 0/35/65 LL=45/PL=17/ PI=28
	10		R-5	13	CL		Silty CLAY, light yellowish brown (7.5YR 6/4), damp to moist, stiff, pin-hole porous, caliche staining along partings, increase in silt, low plasticity	20.4	92	Res = 3116 ohm-cm pH = 8.0 SO4 = 0.0019% Cl = 0.00061%
			SPT-6	6			Sandy lean CLAY, grayish brown (10YR 5/2), moist to damp, firm, low plasticity	26.1		
	15		R-7	9			(no recovery) GW 30 mins AD GW 1 hour AD			
			SPT-8	8			... wet, low plasticity	34.1		EI = 53
	20		R-9	10	CH		Fat CLAY, dark yellowish brown (10YR 4/6), wet, stiff, high plasticity GW ATD	29.9	95	VOC = 0.0ppm Consol u/d
	25									
	30									

TETRA TECH

Project: Upper Berryessa Creek
Project Location: Milpitas
Project Number: 197-4552-0057 (TET 14-57E)

Log of Boring SPT-13
Sheet 2 of 3

Elevation (feet)	Depth (feet)	Sample Type	Sample Number	Sampling Resistance, blows/ft	USCS Symbol	Graphic Log	MATERIAL DESCRIPTION	Water Content, %	Dry Unit Weight, pcf	REMARKS AND OTHER TESTS
			SPT-11	12	CH		Fat CLAY, brown (10YR 5/3), wet, stiff, high plasticity, possible older alluvium, trace of fine silt and sand	26.0		LL=55/PL=17/ PI=52
			R-12	12			... dark grayish brown to very dark gray (10YR 4/2 to 3/1)	23.6	98	VOC = 0.0ppm Consol u/d
			SPT-13	9			... gray brown (5YR 5/1)	27.3		VOC = 0.0ppm G/S/F = 0/10/90
			SPT-14	13	CL		[NATIVE] Older Alluvial Deposits (Qoal)? Silty CLAY, pale brown to olive (5Y 7/3- 6/3), wet, stiff, low plasticity	26.1		VOC = 0.0ppm LL=30/PL=13/ PI=17
			SPT-15	13			as above	20.9		VOC = 0.0ppm
			SPT-16	14			... pale brown (10YR 7/4), trace of sand, very stiff	19.8		VOC = 0.0ppm

TETRA TECH

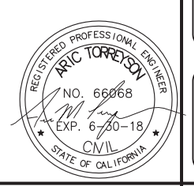

US Army Corps of Engineers
San Francisco District
1455 Market Street
San Francisco, CA 94103

TETRA TECH
17885 VON KARMAN AVE.,
SUITE 500
IRVINE, CA 92614
Phone: (949) 809-5000

Mark	Description	Date	Appr.

DESIGNED BY: AMT
CHECKED BY: YHC
DRAWN BY: AWG
DATE: 8-4-2016
SHEET NO. 65 of 71
DRAWING NO.

SUBMITTED:
Chief, Civil Design Section
APPROVAL RECOMMENDED:
Chief, Engineering Branch
APPROVED:
Chief, Engineering & Technical Services

PREPARED UNDER THE DIRECTION OF
JOHN C. MORROW
LT. COLONEL, C.E., DISTRICT COMMANDER

SANTA CLARA COUNTY, CALIFORNIA
UPPER BERRYESSA CREEK FLOOD RISK MANAGEMENT PROJECT

GEOTECHNICAL BORING LOG

Sheet reference number
B-104

P:\Watt\T31331 Berryessa Design SCVWD\11 Design\01 Final Design\Sheets\ B-104.dwg 02 Aug 2016 - 5:20pm

CONFORMED DRAWING

Project: **Upper Berryessa Creek**
Project Location: **Milpitas**
Project Number: **197-4552-0057 (TET 14-57E)**

Log of Boring SPT-13
Sheet 3 of 3

Elevation (feet)	Depth (feet)	Sample Type	Sample Number	Sampling Resistance, blows/ft	USCS Symbol	Graphic Log	MATERIAL DESCRIPTION	Water Content, %	Dry Unit Weight, pcf	REMARKS AND OTHER TESTS
1	0						Silty CLAY, light olive gray (5Y 6/2), wet, stiff, low plasticity	29.1		VOC = 0.0ppm
3	2		SPT-12	12	CL					
5	4						... very stiff	23.9		VOC = 0.0ppm
7	6		SPT-13	17						
							Bottom of boring at 61.5 feet bgs.			

Notes:
Groundwater at 20.0 feet ATD.
Groundwater at 16.7 and 17.2 feet 30 min and 1 hour after removing augers.
Hole caved between 57 and TD after pulling augers.

TETRA TECH

Project: **Upper Berryessa Creek**
Project Location: **Milpitas**
Project Number: **197-4552-0057 (TET 14-57E)**

Log of Boring SPT-14
Sheet 1 of 1

Date(s) Drilled **12/11/2014**	Logged By **AHM**	Checked By **DB**
Drilling Method **Hollow Stem Auger (HSA)**	Drill Bit Size/Type **6-inch**	Total Depth of Borehole **13.5 feet bgs**
Drill Rig Type **CME 75**	Drilling Contractor **Geo-Ex**	Approximate Surface Elevation **64 feet**
Groundwater Level and Date Measured **None encountered**	Sampling Method(s) **Bulk, Modified California**	Hammer Data **CME auto-trip, 140 lbs, 30-inch drop**
Borehole Backfill **Cement Bentonite Grout**	Location **Lat. 37.41221, Long. -121.88652**	

Elevation (feet)	Depth (feet)	Sample Type	Sample Number	Sampling Resistance, blows/ft	USCS Symbol	Graphic Log	MATERIAL DESCRIPTION	Water Content, %	Dry Unit Weight, pcf	REMARKS AND OTHER TESTS
64	0				SP-SC		[FILL] Levee Fill (af) Silty fine Clayey SAND with Gravel, brown (7.5YR 5/3), damp, medium dense			VOC = 0.0ppm LL=37/PL=15/ PI=22 G/S/F = 5/44/47
59	5				CL		[NATIVE] Younger Alluvial Deposits (Qal) Silty CLAY, gray brown to olive brown (5Y 5/3), moist, soft to firm, low plasticity			
54	10				CL-MH		CLAY with SILT, yellow brown (7.5YR 5/4), moist to wet, stiff			
		R-2	8		SC		Sandy CLAY, dark grayish brown to brown (7.5YR 5/3), moist to wet, firm to stiff, high plasticity, trace of coarse sand	28.1	98	VOC = 0.0ppm
		R-3	17					26.3	104	VOC = 0.0ppm DS u/d @ 1, 2, 3 ksf
							Bottom of boring at 13.5 feet bgs.			

Notes:
No GW during or after pulling augers.
No caving to TD.

TETRA TECH

Project: **Upper Berryessa Creek**
Project Location: **Milpitas**
Project Number: **197-4552-0057 (TET 14-57E)**

Log of Boring SPT-16
Sheet 1 of 2

Date(s) Drilled **12/12/2014**	Logged By **AHM**	Checked By **DB**
Drilling Method **Hollow Stem Auger (HSA)**	Drill Bit Size/Type **6-inch**	Total Depth of Borehole **31.5 feet bgs**
Drill Rig Type **CME 75**	Drilling Contractor **Geo-Ex**	Approximate Surface Elevation **65 feet**
Groundwater Level and Date Measured **17.2 feet After Drilling (AD)**	Sampling Method(s) **Modified California, SPT**	Hammer Data **CME auto-trip, 140 lbs, 30-inch drop**
Borehole Backfill **Cement Bentonite Grout**	Location **Lat. 37.4098, Long. -121.88552**	

Elevation (feet)	Depth (feet)	Sample Type	Sample Number	Sampling Resistance, blows/ft	USCS Symbol	Graphic Log	MATERIAL DESCRIPTION	Water Content, %	Dry Unit Weight, pcf	REMARKS AND OTHER TESTS
65	0				SP-SC		[FILL] Levee Fill (af) Silty fine Clayey SAND, brown (7.5YR 5/3), damp, loose, trace of gravel			G/S/F = 13/50/37 LL=33/PL=14/ PI=19 Res = 2388 ohm-cm pH = 7.6 SO4 = 0.0057% Cl = 0.00039%
60	5		SPT-1	10				12.5		
			SPT-2	11	CL		[NATIVE] Younger Alluvial Deposits (Qal) Silty CLAY, dark yellowish brown (10YR 4/6), damp, stiff,low plasticity, trace of coarse sand and gravel	12.0		VOC = 0.0ppm Eh=58
55	10		R-3	8	SC		Sandy CLAY, brown (7.5YR 5/3), moist to damp, firm, trace of gravel	11.2	113	Consol u/d
			R-4	15	CH		Fat CLAY, brown (10YR 5/3), damp to wet, stiff, high plasticity	24.5	95	VOC = 0.0ppm
50	15		SPT-5	4			... becomes soft	23.2		
			SPT-6	4			... wet, increase in sand and gravel GW ATD	36.1		VOC = 0.0ppm
			SPT-7	4			GW 1 hour AD	22.5		
45	20		R-8	4			... as above ... as above	26.7	95	VOC = 0.0ppm CU Triaxial
			SPT-9	3			... as above			
40	25									

TETRA TECH

Project: **Upper Berryessa Creek**
Project Location: **Milpitas**
Project Number: **197-4552-0057 (TET 14-57E)**

Log of Boring SPT-16
Sheet 2 of 2

Elevation (feet)	Depth (feet)	Sample Type	Sample Number	Sampling Resistance, blows/ft	USCS Symbol	Graphic Log	MATERIAL DESCRIPTION	Water Content, %	Dry Unit Weight, pcf	REMARKS AND OTHER TESTS
40	25		SPT-11	10			[Native] Older Alluvial Deposits (Qoa)? Silty lean CLAY, brown (7.5YR 4/3), wet, stiff, trace of sand and gravel	24.9	101	VOC = 0.0ppm DS u/d @ 1, 2, 3 ksf
35	30		SPT-12	12				21.8		
30	35		SPT-13	15			... trace of coarse sand	21.2		VOC = 0.0ppm
							Bottom of boring at 31.5 feet bgs.			

Notes:
Groundwater at 15.5 feet ATD.
Groundwater at 17.2 feet after removing augers.
No caving to TD.

TETRA TECH

Project: **Upper Berryessa Creek**
Project Location: **Milpitas**
Project Number: **197-4552-0057 (TET 14-57E)**

Log of Boring SPT-18
Sheet 1 of 1

Date(s) Drilled **12/12/2014**	Logged By **AHM**	Checked By **DB**
Drilling Method **Hollow Stem Auger (HSA)**	Drill Bit Size/Type **6-inch**	Total Depth of Borehole **19.5 feet bgs**
Drill Rig Type **CME 75**	Drilling Contractor **Geo-Ex**	Approximate Surface Elevation **68 feet**
Groundwater Level and Date Measured **16.1 feet After Drilling (AD)**	Sampling Method(s) **Bulk, Modified California, SPT**	Hammer Data **CME auto-trip, 140 lbs, 30-inch drop**
Borehole Backfill **Cement Bentonite Grout**	Location **Lat. 37.41057, Long. -121.88397**	

Elevation (feet)	Depth (feet)	Sample Type	Sample Number	Sampling Resistance, blows/ft	USCS Symbol	Graphic Log	MATERIAL DESCRIPTION	Water Content, %	Dry Unit Weight, pcf	REMARKS AND OTHER TESTS
68	0				SP-SC		[FILL] Levee Fill (af) Silty Clayey SAND with Gravel, brown (7.5YR 3/4), damp to moist, trace of 3/4 inch gravel			VOC = 0.0ppm LL=32/PL=15/ PI=17 G/S/F = 26/51/23 Res = 2228 ohm-cm pH = 7.9 SO4 = 0.0057% Cl = 0.00039%
63	5				CL		[NATIVE] Older Alluvial Deposits (Qoa) Silty CLAY, yellowish brown (10YR 5/4), damp, stiff, low plasticity			
58	10		R-2	18			... damp to moist, caliche staining along partings	24.9	103	Consol u/d VOC = 0.0ppm
					SP-GW		Poorly graded GRAVEL with Silt, brown (7.5YR 3/4), wet, loose			
53	15		R-3	9			as above GW AD			VOC = 0.0ppm
			SPT-4	20			... medium dense	16.7		VOC = 0.0ppm
48	20						Bottom of boring at 19.5 feet bgs.			

Notes:
Groundwater at 16.1 feet after removing augers.
No caving to TD.

TETRA TECH

REGISTERED PROFESSIONAL ENGINEER
ARIC TORREYSON
NO. 66068
EXP. 6-30-18
CIVIL
STATE OF CALIFORNIA

US Army Corps of Engineers
San Francisco District
1455 Market Street
San Francisco, CA 94103

TETRA TECH
17885 VON KARMAN AVE., SUITE 500
IRVINE, CA 92614
Phone: (949) 809-5000

Mark	Description	Date	Appr.

DESIGNED BY: AMT
CHECKED BY: YHC
DRAWN BY: AWG
DATE: 8-4-2016
SHEET NO. 66 of 71
DRAWING NO.

PREPARED UNDER THE DIRECTION OF
JOHN C. MORROW
LT. COLONEL, C.E., DISTRICT COMMANDER

SUBMITTED:
Chief, Civil Design Section
APPROVAL RECOMMENDED:
Chief, Engineering Branch
APPROVED:
Chief, Engineering & Technical Services

SANTA CLARA COUNTY, CALIFORNIA
UPPER BERRYESSA CREEK FLOOD RISK MANAGEMENT PROJECT

GEOTECHNICAL BORING LOG

Sheet reference number
B-105

CONFORMED DRAWING

File No. NFG-3909-01
September 1999

DATE DRILLED: 8/27/99 | DRILLER: Exploration Geoservices
ELEVATION: 246 ft. | DRILLING METHOD: Hollow Stem Auger
BACKFILL METHOD: Grout | DIAMETER OF BORING: 8 in.
LOGGED BY: J. Ball | DEPTH TO GROUNDWATER: NGWE

Log of Exploratory Boring No. B1

Depth (ft)	Sample No.	Graphic Log	Blows Per Foot	Pocket Pen (t.s.f.)	Description	U.S.C.S. Soil - Group	In-Place Moisture (% dry weight)	In-Place Dry Density (pcf)
0					ALLUVIUM			
1-3	1-1		56		SANDY SILT with gravel and minor clay, dark gray, dry, hard.	ML		
5-7	1-2		30		SANDY LEAN CLAY with gravel, very dark gray, gravel up to 1 inch, gravels subrounded, poorly sorted matrix, dry to slightly moist, porous.	CL		
9					Very hard drilling.			
10-11	NSR		50/5"		SANDSTONE GRAVELS with minor sand and clay, matrix supported.	GP		
13-14	1-3		90		POORLY GRADED GRAVEL with sand and clay, dry, very dense, gravels are composed of strongly cemented sandstone and are angular.	GP		
15-16			50/5"		Very hard drilling.			
18			63		POORLY GRADED GRAVEL, matrix supported, moist, very dense.	GP		
20					SANTA CLARA FORMATION			
21-22	1-4		88		CLAYEY SAND interbedded with LEAN CLAY, highly weathered, yellowish brown to gray, moist, very dense.	SC		
25			89		Highly weathered SAND, interbedded with lean clay, olive, very dense. Boring terminated at 26.5 feet. Groundwater not encountered.			

Earth Systems Consultants Northern California | Lot 26, Tract 6956 Arlen Court San Jose, California | LOG OF EXPLORATORY BORING NO. B1
Figure A4

File No. NFG-3909-01
September 1999

DATE DRILLED: 8/27/99 | DRILLER: Exploration Geoservices
ELEVATION: 257 ft. | DRILLING METHOD: Hollow Stem Auger
BACKFILL METHOD: Grout | DIAMETER OF BORING: 8 in.
LOGGED BY: J. Buckthal | DEPTH TO GROUNDWATER: 17 ft.

Log of Exploratory Boring No. B3

Depth (ft)	Sample No.	Graphic Log	Blows Per Foot	Pocket Pen (t.s.f.)	Description	U.S.C.S. Soil - Group	In-Place Moisture (% dry weight)	In-Place Dry Density (pcf)
0					ALLUVIUM	ML		
1-6					SANDY SILT with gravel and clay, damp, very stiff.			
8-9	3-1		26		LEAN CLAY with subangular coarse grained sand, dark brown, moist, very stiff.	CL		
12					Small lens of gravels, rig chattering, hard drilling.			
20-21	3-2		60		CLAYEY SAND with gravel, brown, wet, dense, well graded fine grained sand, fine gravel, subangular to subrounded, matrix supported gravels.	SC		
23					SANTA CLARA FORMATION			
24					LEAN CLAY with sand, and gravelbrown and gray mottled, moist, hard, small pieces of charcoal, minor carbonate.	CL		
25	3-3		72/11"	2.7	Boring terminated at 26.5 feet. Groundwater encountered at 17 feet.			

Earth Systems Consultants Northern California | Lot 26, Tract 6956 Arlen Court San Jose, California | LOG OF EXPLORATORY BORING NO. B3
Figure A6

Boring & Well Construction Log — Kennedy/Jenks Consultants

BORING LOCATION	WEST LEVEE, BERRYESSA CREEK, MILPITAS, CA.	Boring/Well Name	BC-1
DRILLING COMPANY	KVILHAUG	Project Name	SCVWD - BERRYESSA CREEK
DRILLING METHOD(S)	HOLLOW STEM AUGER	Project Number	940011.04
ISOLATION CASING	NONE	ELEVATION AND DATUM	30.05 FT. NGVD
BLANK CASING	2-INCH SCH.40 PVC (0.8 – 10.3 FT.)	TOTAL DEPTH	17.0 FT. bgs
PERFORATED CASING	2-INCH SCH.40 PVC; 0.010-INCH SLOTS (10.3 – 16.8 FT.)	DATE STARTED	2/1/95
SIZE AND TYPE OF FILTER PACK	NO. 2/16 MONTEREY SAND (9.0 – 17.0 FT.)	DATE COMPLETED	2/1/95
SEAL	3/8-INCH DIA. BENTONITE PELLETS (7.0 – 9.0 FT.)	STATIC WATER ELEVATION	21.55 FT. NGVD
GROUT	CEMENT/BENTONITE (5%) (0.9 – 7.0 FT.)	DRILLER	P. SANTOS
		DRILL BIT/SI SIZE	8-INCH O.D.
		LOGGED BY	K. ALEXANDER
		SAMPLING METHODS	SPLIT-SPOON SAMPLER
		WELL COMPLETION	☒ SURFACE HOUSING ☐ STAND PIPE ____ FT.

SAMPLES: Type & No. | Recovery (Feet) | Penetr. Resist. (Blows/6") | Drill Depth (Feet)
WELL CONSTRUCTION: Water tight well enclosure — LOCKING EXPANSION PLUG; GROUT; BLANK CASING; NO ODOR OVA = 0ppm; SEAL; FILTER PACK; NO ODOR OVA = 0ppm; PERFORATED CASING; NO ODOR OVA = 0ppm; BOTTOM PLUG

Sample No.	Recovery (Feet)	Penetr. Resist. (Blows/6")	Drill Depth (Feet)	USCS Log	Lithology	Color	SAMPLE DESCRIPTION and DRILLING REMARKS
1	1.5	3 6 8	5	CL		7.5YR 3/0	LEAN CLAY: VERY DARK GRAY, TRACE FINE SAND, MODERATE PLASTICITY, VERY STIFF, DAMP (FROM CUTTINGS).
						7.5YR 3/0	AT 5 FEET: BLACK
2	1.5	3 4 6	10	CH		10YR 4/1	FAT CLAY: DARK GRAY, TRACE GRAY-BROWN MOTTLING, HIGH PLASTICITY, SOFT, MOIST. MEASURED WATER ON RODS AT 11 FEET bgs.
3	1.5	3 5 6	15	SP		10YR 4/3	POORLY GRADED SAND: BROWN, FINE SAND, MEDIUM DENSE, WET.

BOTTOM OF BORING AT 17.0 FEET bgs.

F-40.1 (8-87) (3-88) (8-90) — SHEET 1 OF 2

Boring & Well Construction Log — Kennedy/Jenks Consultants

Project Name SCVWD - BERRYESSA CREEK | Project Number 940011.04 | Boring/Well Name BC-1

SAMPLES: Type & No. | Recovery (Feet) | Penetr. Resist. (Blows/6") | Drill Depth (Feet) | WELL CONSTRUCTION | USCS Log | Lithology | Color | SAMPLE DESCRIPTION and DRILLING REMARKS

NOTES:
1. LOG ELEVATION IS TAKEN FROM TOP OF WELL CASING.
2. VERTICAL SCALE IS 1-INCH = 2.5 FEET.
3. SOIL CLASSIFIED IN ACCORDANCE WITH UNIFIED SOIL CLASSIFICATION SYSTEM (ASTM METHOD D-2488-93).
4. COLOR DESIGNATION IN ACCORDANCE WITH THE MUNSELL SOIL COLOR CHARTS (1990).
5. bgs = BELOW GROUND SURFACE.

F-40.1 (8-87) (3-88) (8-90) — SHEET 2 OF 2

Boring & Well Construction Log — Kennedy/Jenks Consultants

BORING LOCATION	WEST LEVEE, BERRYESSA CREEK, MILPITAS, CA.	Boring/Well Name	BC-2
DRILLING COMPANY	KVILHAUG	Project Name	SCVWD - BERRYESSA CREEK
DRILLING METHOD(S)	HOLLOW STEM AUGER	Project Number	940011.04
ISOLATION CASING	NONE	ELEVATION AND DATUM	29.14 FT. NGVD
BLANK CASING	2-INCH SCH.40 PVC (0.5 – 9.3 FT.)	TOTAL DEPTH	16.0 FT. bgs
PERFORATED CASING	2-INCH SCH.40 PVC; 0.010-INCH SLOTS (9.3 – 15.8 FT.)	DATE STARTED	2/1/95
SIZE AND TYPE OF FILTER PACK	NO. 2/16 MONTEREY SAND (8.0 – 16.0 FT.)	DATE COMPLETED	2/1/95
SEAL	3/8-INCH DIA. BENTONITE PELLETS (6.0 – 8.0 FT.)	STATIC WATER ELEVATION	20.74 FT. NGVD
GROUT	CEMENT/BENTONITE (5%) (0.7 – 6.0 FT.)	DRILLER	P. SANTOS
		DRILL BIT/SI SIZE	8-INCH O.D.
		LOGGED BY	K. ALEXANDER
		SAMPLING METHODS	SPLIT-SPOON SAMPLER
		WELL COMPLETION	☒ SURFACE HOUSING ☐ STAND PIPE ____ FT.

SAMPLES: Type & No. | Recovery (Feet) | Penetr. Resist. (Blows/6") | Drill Depth (Feet)
WELL CONSTRUCTION: Water tight well enclosure — LOCKING EXPANSION PLUG; GROUT; BLANK CASING; NO ODOR OVA = 0ppm; SEAL; NO ODOR OVA = 0ppm; FILTER PACK; PERFORATED CASING; NO ODOR OVA = 0ppm; BOTTOM PLUG

Sample No.	Recovery (Feet)	Penetr. Resist. (Blows/6")	Drill Depth (Feet)	USCS Log	Lithology	Color	SAMPLE DESCRIPTION and DRILLING REMARKS
1	1.5	3 4 10	5	CL		7.5YR 3/0	LEAN CLAY: VERY DARK GRAY, MODERATE PLASTICITY, VERY STIFF, DAMP (FROM CUTTINGS).
							AT 5 FEET: TRACE GRAY-BROWN MOTTLING
2	1.5	8 14 16	10	ML SP		2.5Y 5/2	SILT: GRAYISH BROWN, NONPLASTIC, STIFF, WET.
				CL			POORLY GRADED SAND: GRAYISH BROWN, FINE SAND, MEDIUM DENSE, WET. LEAN CLAY: GRAYISH BROWN, FEW GRAY-BROWN MOTTLING, LOW PLASTICITY, STIFF, WET.
3	1.0		15	SP		10YR 4/3	POORLY GRADED SAND: BROWN, FINE SAND, FEW CLAY, TRACE COARSE SAND, MEDIUM DENSE, WET.

BOTTOM OF BORING AT 16.0 FEET bgs.

F-40.1 (8-87) (3-88) (8-90) — SHEET 1 OF 2

Boring & Well Construction Log — Kennedy/Jenks Consultants

Project Name SCVWD - BERRYESSA CREEK | Project Number 940011.04 | Boring/Well Name BC-2

SAMPLES: Type & No. | Recovery (Feet) | Penetr. Resist. (Blows/6") | Drill Depth (Feet) | WELL CONSTRUCTION | USCS Log | Lithology | Color | SAMPLE DESCRIPTION and DRILLING REMARKS

NOTES:
1. LOG ELEVATION IS TAKEN FROM TOP OF WELL CASING.
2. VERTICAL SCALE IS 1-INCH = 2.5 FEET.
3. SOIL CLASSIFIED IN ACCORDANCE WITH UNIFIED SOIL CLASSIFICATION SYSTEM (ASTM METHOD D-2488-93).
4. COLOR DESIGNATION IN ACCORDANCE WITH THE MUNSELL SOIL COLOR CHARTS (1990).
5. bgs = BELOW GROUND SURFACE.

F-40.1 (8-87) (3-88) (8-90) — SHEET 2 OF 2

REGISTERED PROFESSIONAL ENGINEER ARIC TORREYSON NO. 66068 EXP. 6-30-18 CIVIL STATE OF CALIFORNIA

US Army Corps of Engineers
San Francisco District
1455 Market Street
San Francisco, CA 94103

TETRA TECH
17885 VON KARMAN AVE., SUITE 500
IRVINE, CA 92614
Phone: (949) 809-5000

Mark	Description	Date	Appr.

DESIGNED BY: AMT | CHECKED BY: YHC | DRAWN BY: AWG
DATE: 8-4-2016 | SHEET NO. 67 of 71 | DRAWING NO.

SUBMITTED:
Chief, Civil Design Section — APPROVAL RECOMMENDED:
Chief, Engineering Branch — APPROVED:
Chief, Engineering & Technical Services

PREPARED UNDER THE DIRECTION OF JOHN C. MORROW
LT. COLONEL, C.E., DISTRICT COMMANDER

SANTA CLARA COUNTY, CALIFORNIA
UPPER BERRYESSA CREEK FLOOD RISK MANAGEMENT PROJECT

GEOTECHNICAL BORING LOG

Sheet reference number B-106

P:\Watt\T31331 Berryessa Design SCVWD\11 Design\01 Final Design\Sheets\ B-106.dwg 02 Aug 2016 - 5:22pm

CONFORMED DRAWING

Boring & Well Construction Log — BC-1

Kennedy/Jenks Consultants

Boring Location	EAST LEVEE, BERRYESSA CREEK, MILPITAS, CA.
Drilling Company	KVILHAUG
Driller	P. SANTOS
Drilling Methods(s)	HOLLOW STEM AUGER
Drill Bit/Bit Size	8-INCH O.D.
Isolation Casing	NONE (FROM — TO — FT.)
Blank Casing	2-INCH SCH.40 PVC (FROM 0.1 TO 9.3 FT.)
Perforated Casing	2-INCH SCH.40 PVC; 0.010-INCH SLOTS (FROM 9.3 TO 15.8 FT.)
Size and Type of Filter Pack	NO. 2/16 MONTEREY SAND (FROM 8.0 TO 16.0 FT.)
Seal	3/8-INCH DIA. BENTONITE PELLETS (FROM 6.0 TO 9.0 FT.)
Grout	CEMENT/BENTONITE (5%) (FROM 0.5 TO 6.0 FT.)
Boring/Well Name	BC-3
Project Name	SCVWD - BERRYESSA CREEK
Project Number	940011.04
Elevation and Datum	35.89 FT. NGVD
Total Depth	16.5 FT. bgs
Date Started	2/2/95
Date Completed	2/2/95
Static Water Elevation	28.39 FT. NGVD
Logged By	K. ALEXANDER
Sampling Methods	CONTINUOUS
Well Completion	☒ SURFACE HOUSING ☐ STAND PIPE ____ FT.

Type & No.	Recovery (Feet)	Penetr. Resist. Blows/6"	Drill Depth (Feet)	Water tight well enclosure	USCS Log	Lithologic	Color	Sample Description and Drilling Remarks
				LOCKING EXPANSION PLUG				
				GROUT				
1	1.5	3 4 7		NO ODOR OVA = 0ppm	CL		7.5YR 3/0	LEAN CLAY: VRY DARK GRAY, TRACE FINE SAND, MODERATE PLASTICITY, VERY STIFF, DAMP (FROM CUTTINGS).
				BLANK CASING				
2	1.5	3 6 8		NO ODOR OVA = 0ppm			10YR 4/2	AT 3 FEET: DARK GRAYISH BROWN.
3	1.1	4 5 9	5	NO ODOR OVA = 0ppm	CH		10YR 3/1	FAT CLAY: VERY DARK GRAY, TRACE FINE SAND, LITTLE GRAY-BROWN MOTTLING, HIGH PLASTICITY, VERY STIFF, DAMP.
				SEAL				
4	1.5	4 4 10		NO ODOR OVA = 0ppm				
5	1.4	4 5 7		NO ODOR OVA = 0ppm				
6	1.5	3 5 9	10	NO ODOR OVA = 0ppm	CL		10YR 3/1	LEAN CLAY: VERY DARK GRAY, LITTLE GRAY-BROWN MOTTLING, LOW PLASTICITY, VERY STIFF, MOIST.
7	1.2	4 4 7		NO ODOR OVA = 0ppm			10YR 4/1	AT 10.5 FEET: DARK GRAY, TRACE ORANGE-BROWN MOTTLING, WET.
				PERFORATED CASING				
8	1.5	6 7 9		NO ODOR OVA = 0ppm	CL		2.5Y 5/2	SANDY LEAN CLAY: GRAYISH BROWN, FINE SAND, TRACE GRAVEL TO 3/8-INCH, MODERATE PLASTICITY, STIFF, WET.
9	1.5	4 12 12		NO ODOR OVA = 0ppm	SP		2.5Y 4/2	POORLY GRADED SAND: DARK GRAYISH BROWN, FINE SAND, FEW CLAY, MEDIUM DENSE, WET. AT 14.5 FEET: 3-INCH THICK INTERBED OF FINE TO COARSE SAND.
			15	FILTER PACK	MH		*	PLASTIC SILT: DARK GRAYISH BROWN, MODERATE PLASTICITY, MEDIUM STIFF, WET.
					SW		*	WELL GRADED SAND WITH CLAY: DARK GRAYISH BROWN, FINE TO MEDIUM SAND, LOOSE, WET.
10	1.5	4 7 12		NO ODOR OVA = 0ppm	CL		2.5Y 5/2	LEAN CLAY: GRAYISH BROWN, TRACE FINE SAND, MODERATE PLASTICITY, HARD, WET.
				BOTTOM OF BORING AT 16.5 FEET bgs.				

F-40.1 (6-87) (3-88) (8-90) — SHEET 1 OF 2

Boring & Well Construction Log — BC-2

Kennedy/Jenks Consultants

Project Name SCVWD - BERRYESSA CREEK — Project Number 940011.04 — Boring/Well Name BC-3

Type & No.	Recovery (Feet)	Penetr. Resist. Blows/6"	Drill Depth (Feet)	Well Construction	USCS Log	Lithologic	Color	Sample Description and Drilling Remarks

NOTES:
1. SOIL SAMPLES COLLECTED CONTINUOUSLY FROM 1 FOOT bgs TO TOTAL DEPTH.
2. LOG ELEVATION IS TAKEN FROM TOP OF WELL CASING.
3. VERTICAL SCALE IS 1-INCH = 2.5 FEET.
4. SOIL CLASSIFIED IN ACCORDANCE WITH UNIFIED SOIL CLASSIFICATION SYSTEM (ASTM METHOD D-2488-93).
5. COLOR DESIGNATION IN ACCORDANCE WITH THE MUNSELL SOIL COLOR CHARTS (1990).
6. bgs = BELOW GROUND SURFACE.

F-40.1 (6-87) (3-88) (8-90) — SHEET 2 OF 2

Boring & Well Construction Log — BC-4

Kennedy/Jenks Consultants

Boring Location	EAST LEVEE, BERRYESSA CREEK, MILPITAS, CA.
Drilling Company	KVILHAUG
Driller	P. SANTOS
Drilling Methods(s)	HOLLOW STEM AUGER
Drill Bit/Bit Size	8-INCH O.D.
Isolation Casing	NONE (FROM — TO — FT.)
Blank Casing	2-INCH SCH.40 PVC (FROM 0.2 TO 9.8 FT.)
Perforated Casing	2-INCH SCH.40 PVC; 0.010-INCH SLOTS (FROM 9.8 TO 16.3 FT.)
Size and Type of Filter Pack	NO. 2/16 MONTEREY SAND (FROM 8.5 TO 16.5 FT.)
Seal	3/8-INCH DIA. BENTONITE PELLETS (FROM 6.5 TO 8.5 FT.)
Grout	CEMENT/BENTONITE (5%) (FROM 0.5 TO 6.5 FT.)
Boring/Well Name	BC-4
Project Name	SCVWD - BERRYESSA CREEK
Project Number	940011.04
Elevation and Datum	43.24 FT. NGVD
Total Depth	16.5 FT. bgs
Date Started	2/1/95
Date Completed	2/1/95
Static Water Elevation	34.24 FT. NGVD
Logged By	K. ALEXANDER
Sampling Methods	SPLIT-SPOON SAMPLER
Well Completion	☒ SURFACE HOUSING ☐ STAND PIPE ____ FT.

Type & No.	Recovery (Feet)	Penetr. Resist. Blows/6"	Drill Depth (Feet)	Water tight well enclosure	USCS Log	Lithologic	Color	Sample Description and Drilling Remarks
				LOCKING EXPANSION PLUG				
				GROUT	CL		10YR 3/1	LEAN CLAY: VERY DARK GRAY, TRACE FINE SAND, MODERATE PLASTICITY, VERY STIFF, DAMP (FROM CUTTINGS).
1	1.5	3 4 6	5	BLANK CASING			10YR 4/2	AT 5 FEET: DARK GRAYISH BROWN. FEW GRAY-BROWN MOTTLING.
				NO ODOR OVA = 0ppm				
				SEAL				
2	1.5	3 6 8	10	FILTER PACK	CH		7.5YR 2/0	FAT CLAY: BLACK, TRACE FINE SAND, TRACE GRAY-BROWN MOTTLING, HIGH PLASTICITY, STIFF, MOIST.
				NO ODOR OVA = 0ppm				
				PERFORATED CASING				
3	1.2	3 4 7	15	NO ODOR OVA = 0ppm	SC		10YR 4/2	CLAYEY SAND: DARK GRAYISH BROWN, FINE SAND, TRACE COARSE SAND, MEDIUM DENSE, WET.
				BOTTOM PLUG	CH		10YR 4/2	SANDY FAT CLAY: DARK GRAYISH BROWN, FINE SAND, TRACE COARSE SAND, HIGH PLASTICITY, MEDIUM STIFF, WET. BOTTOM OF BORING AT 16.5 FEET bgs.

F-40.1 (6-87) (3-88) (8-90) — SHEET 1 OF 2

Boring & Well Construction Log — BC-5

Kennedy/Jenks Consultants

Project Name SCVWD - BERRYESSA CREEK — Project Number 940011.04 — Boring/Well Name BC-5

Type & No.	Recovery (Feet)	Penetr. Resist. Blows/6"	Drill Depth (Feet)	Well Construction	USCS Log	Lithologic	Color	Sample Description and Drilling Remarks

NOTES:
1. LOG ELEVATION IS TAKEN FROM TOP OF WELL CASING.
2. VERTICAL SCALE IS 1-INCH = 2.5 FEET.
3. SOIL CLASSIFIED IN ACCORDANCE WITH UNIFIED SOIL CLASSIFICATION SYSTEM (ASTM METHOD D-2488-93).
4. COLOR DESIGNATION IN ACCORDANCE WITH THE MUNSELL SOIL COLOR CHARTS (1990).
5. bgs = BELOW GROUND SURFACE.

F-40.1 (6-87) (3-88) (8-90) — SHEET 2 OF 2

Boring & Well Construction Log — BC-6

Kennedy/Jenks Consultants

Boring Location	EAST LEVEE, BERRYESSA CREEK, MILPITAS, CA.
Drilling Company	KVILHAUG
Driller	P. SANTOS
Drilling Methods(s)	HOLLOW STEM AUGER
Drill Bit/Bit Size	8-INCH O.D.
Isolation Casing	NONE (FROM — TO — FT.)
Blank Casing	2-INCH SCH.40 PVC (FROM 0.3 TO 9.3 FT.)
Perforated Casing	2-INCH SCH.40 PVC; 0.010-INCH SLOTS (FROM 9.3 TO 13.8 FT.)
Size and Type of Filter Pack	NO. 2/16 MONTEREY SAND (FROM 8.0 TO 15.0 FT.)
Seal	3/8-INCH DIA. BENTONITE PELLETS (FROM 6.0 TO 8.0 FT.)
Grout	CEMENT/BENTONITE (5%) (FROM 0.5 TO 6.0 FT.)
Boring/Well Name	BC-5
Project Name	SCVWD - BERRYESSA CREEK
Project Number	940011.04
Elevation and Datum	49.67 FT. NGVD
Total Depth	16.5 FT. bgs
Date Started	2/2/95
Date Completed	2/2/95
Static Water Elevation	38.67 FT. NGVD
Logged By	K. ALEXANDER
Sampling Methods	SPLIT-SPOON SAMPLER
Well Completion	☒ SURFACE HOUSING ☐ STAND PIPE ____ FT.

Type & No.	Recovery (Feet)	Penetr. Resist. Blows/6"	Drill Depth (Feet)	Water tight well enclosure	USCS Log	Lithologic	Color	Sample Description and Drilling Remarks
				LOCKING EXPANSION PLUG				
				GROUT	CL		10YR 2/1	LEAN CLAY: BLACK, TRACE FINE SAND, LOW PLASTICITY, VERY STIFF, DAMP (FROM CUTTINGS).
1	1.5	3 3 3	5	BLANK CASING			2.5Y 4/2	AT 5 FEET: DARK GRAYISH BROWN.
				NO ODOR OVA = 0ppm	SC		*	CLAYEY SAND: DARK GRAYISH BROWN, FINE SAND, TRACE COARSE SAND, MEDIUM DENSE, MOIST.
					SP		*	POORLY GRADED SAND: DARK GRAYISH BROWN, FINE SAND, TRACE COARSE SAND, MEDIUM DENSE, MOIST.
				SEAL				
				FILTER PACK				
2	1.0	4 6 10	10	NO ODOR OVA = 0ppm	CH		10YR 3/1	FAT CLAY: VERY DARK GRAY, TRACE COARSE SAND, HIGH PLASTICITY, STIFF, MOIST.
							10YR 4/1	AT 11 FEET: DARK GRAY, FEW FINE SAND, FEW GRAY-BROWN MOTTLING.
				PERFORATED CASING				
				BOTTOM PLUG				
3	1.5	5 8 14	15	NATIVE MATERIAL			10YR 3/1	AT 15 FEET: VERY DARK GRAY, TRACE FINE SAND, VERY STIFF, WET.
				NO ODOR OVA = 0ppm				
				BOTTOM OF BORING AT 16.5 FEET bgs.				

F-40.1 (6-87) (3-88) (8-90) — SHEET 1 OF 2

Boring & Well Construction Log — BC-7

Kennedy/Jenks Consultants

Project Name SCVWD - BERRYESSA CREEK — Project Number 940011.04 — Boring/Well Name BC-6

Type & No.	Recovery (Feet)	Penetr. Resist. Blows/6"	Drill Depth (Feet)	Well Construction	USCS Log	Lithologic	Color	Sample Description and Drilling Remarks

NOTES:
1. LOG ELEVATION IS TAKEN FROM TOP OF WELL CASING.
2. VERTICAL SCALE IS 1-INCH = 2.5 FEET.
3. SOIL CLASSIFIED IN ACCORDANCE WITH UNIFIED SOIL CLASSIFICATION SYSTEM (ASTM METHOD D-2488-93).
4. COLOR DESIGNATION IN ACCORDANCE WITH THE MUNSELL SOIL COLOR CHARTS (1990).
5. bgs = BELOW GROUND SURFACE.

F-40.1 (6-87) (3-88) (8-90) — SHEET 2 OF 2

US Army Corps of Engineers
San Francisco District
1455 Market Street
San Francisco, CA 94103

TETRA TECH
17885 VON KARMAN AVE., SUITE 500
IRVINE, CA 92614
Phone: (949) 809-5000

Mark	Description	Date	Appr.

DESIGNED BY: AMT — CHECKED BY: YHC — DRAWN BY: AWG
DATE: 8-4-2016 — SHEET NO. 68 of 71 — DRAWING NO.

PREPARED UNDER THE DIRECTION OF JOHN C. MORROW, LT. COLONEL, C.E., DISTRICT COMMANDER

SUBMITTED: Chief, Civil Design Section — APPROVAL RECOMMENDED:
Chief, Engineering Branch — APPROVED:
Chief, Engineering & Technical Services

SANTA CLARA COUNTY, CALIFORNIA
UPPER BERRYESSA CREEK FLOOD RISK MANAGEMENT PROJECT

GEOTECHNICAL BORING LOG

REGISTERED PROFESSIONAL ENGINEER — ARIC TORREYSON — NO. 66068 — EXP. 6-30-18 — CIVIL — STATE OF CALIFORNIA

Sheet reference number B-107

P:\Watt\T31331 Berryessa Design SCVWD\11 Design\01 Final Design\Sheets\ B-107.dwg 02 Aug 2016 - 5:23pm

CONFORMED DRAWING

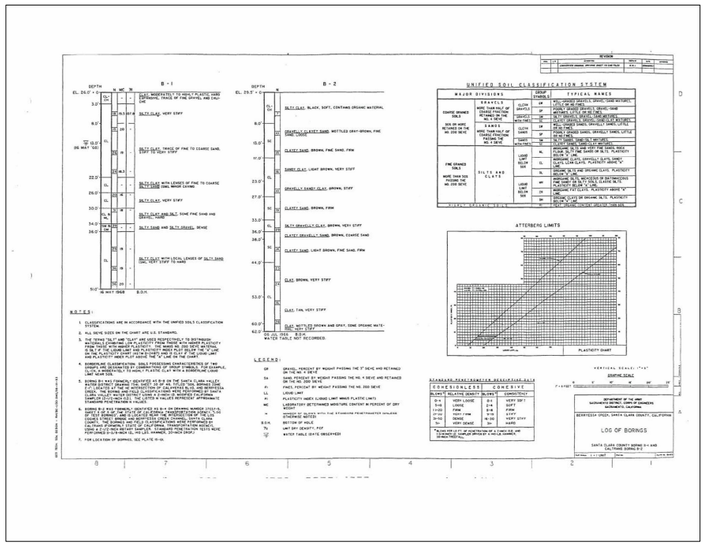

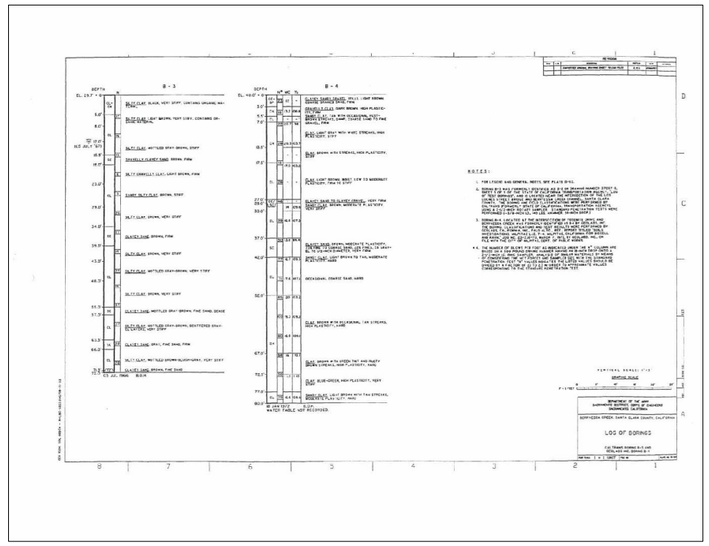

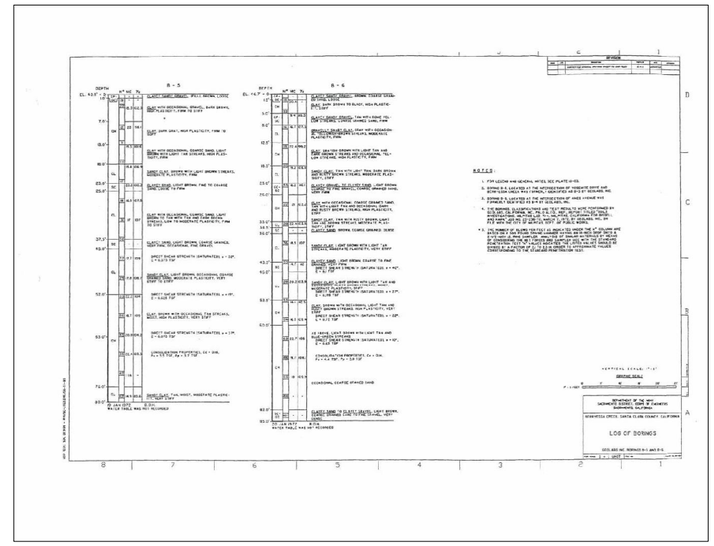

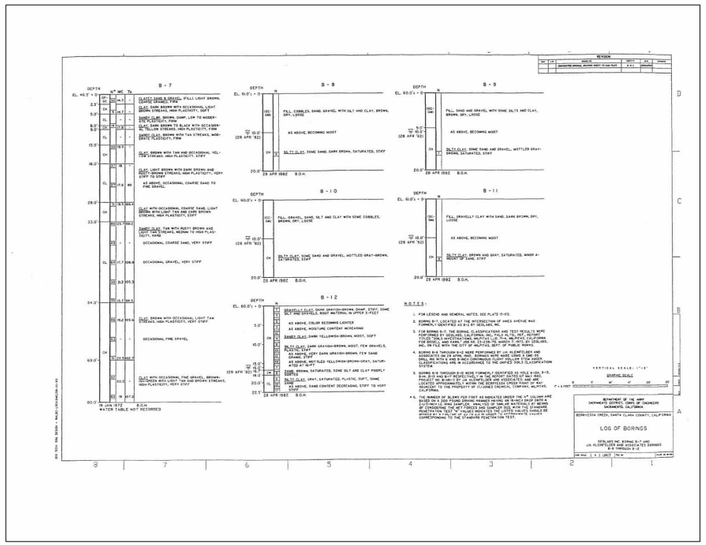

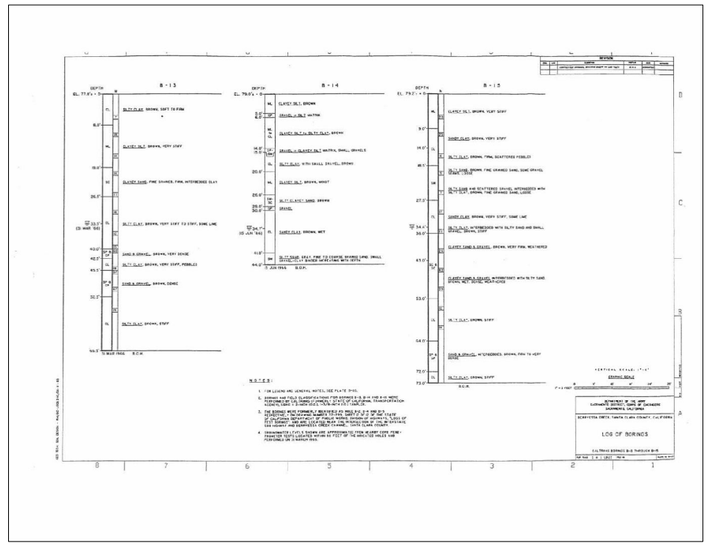

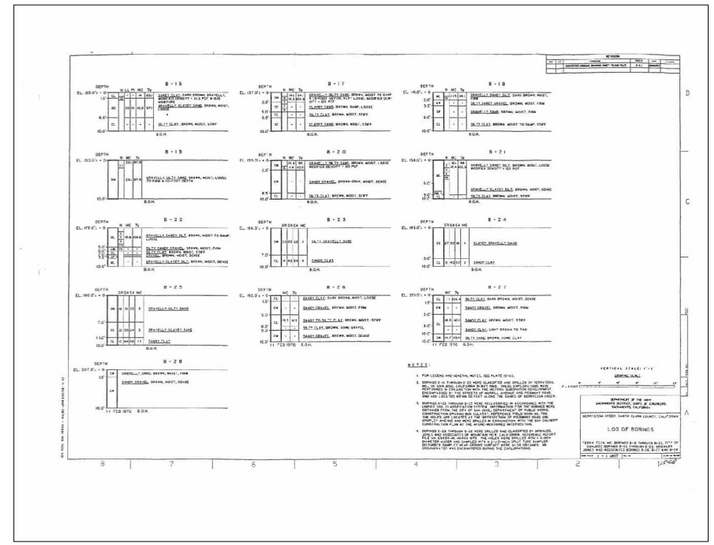

REGISTERED PROFESSIONAL ENGINEER
ARIC TORREYSON
NO. 66068
EXP. 6-30-18
CIVIL
STATE OF CALIFORNIA

US Army Corps of Engineers
San Francisco District
1455 Market Street
San Francisco, CA 94103

TETRA TECH
17885 VON KARMAN AVE.,
SUITE 500
IRVINE, CA 92614
Phone: (949) 809-5000

Mark	Description	Date	Appr.

DESIGNED BY: AMT | CHECKED BY: YHC | DRAWN BY: AWG
DATE: 8-4-2016 | SHEET NO. 69 of 71 | DRAWING NO.

SUBMITTED: Chief, Civil Design Section
APPROVAL RECOMMENDED:
Chief, Engineering Branch
APPROVED: Chief, Engineering & Technical Services

PREPARED UNDER THE DIRECTION OF
JOHN C. MORROW
LT. COLONEL, C.E., DISTRICT COMMANDER

SANTA CLARA COUNTY, CALIFORNIA
UPPER BERRYESSA CREEK FLOOD RISK MANAGEMENT PROJECT

GEOTECHNICAL BORING LOG

Sheet reference number B-108

P:\Watr\T31331 Berryessa Design SCVWD\11 Design\01 Final Design\Sheets\ B-108.dwg 03 Aug 2016 - 10:04am

CONFORMED DRAWING

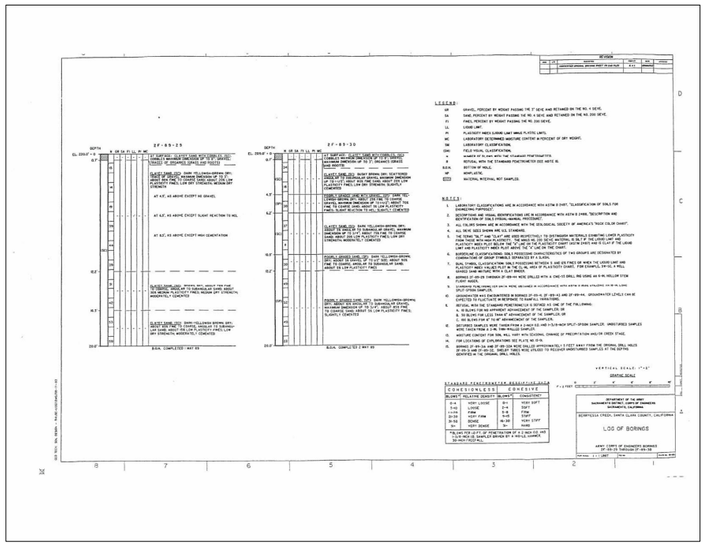

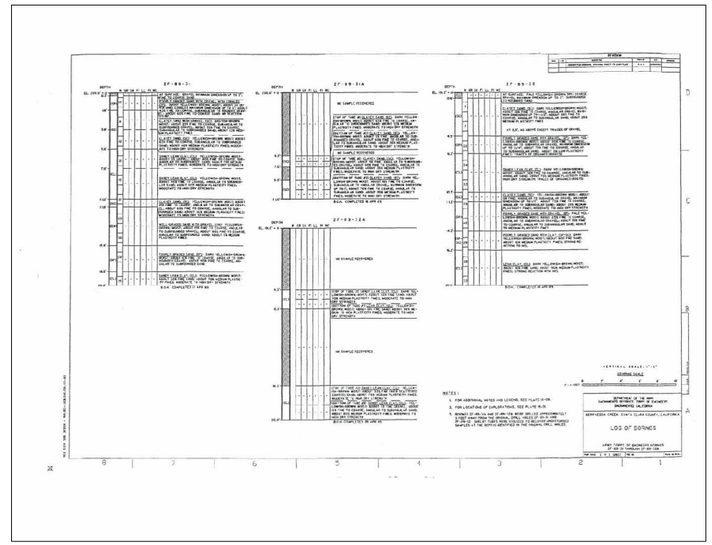

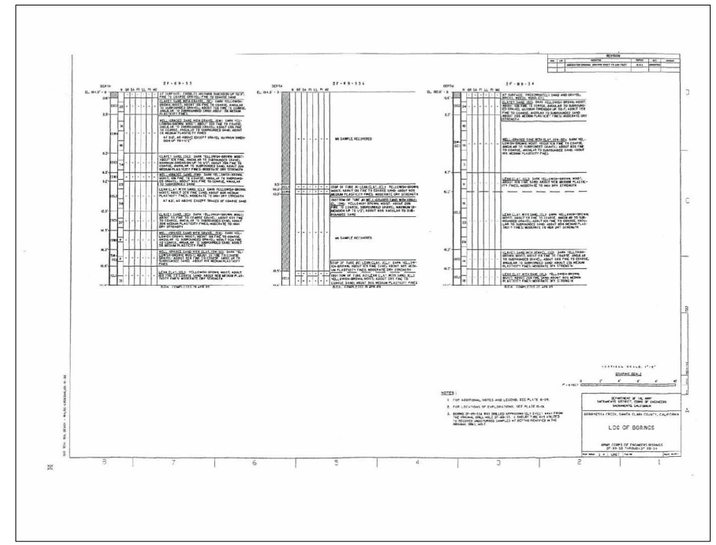

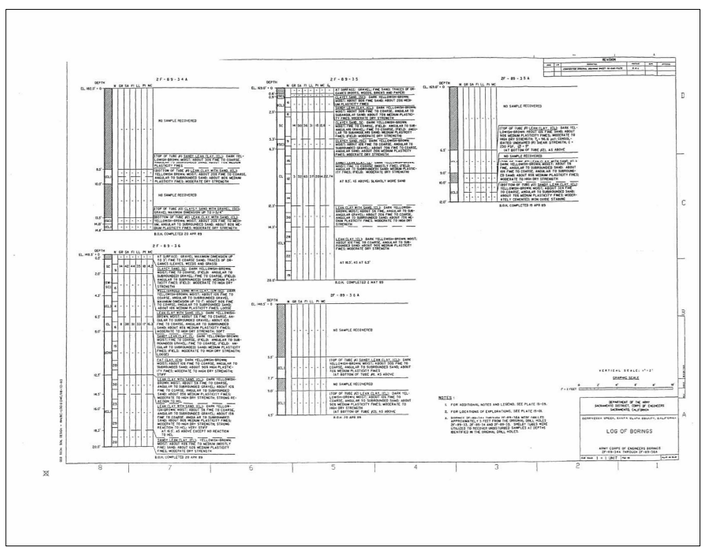

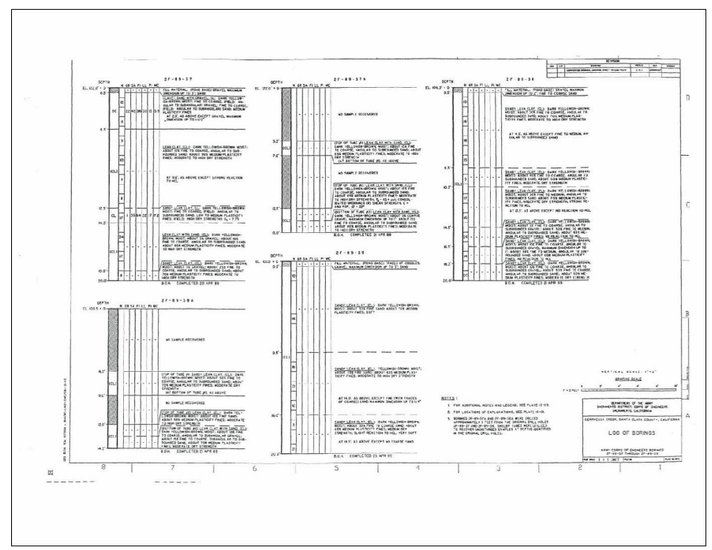

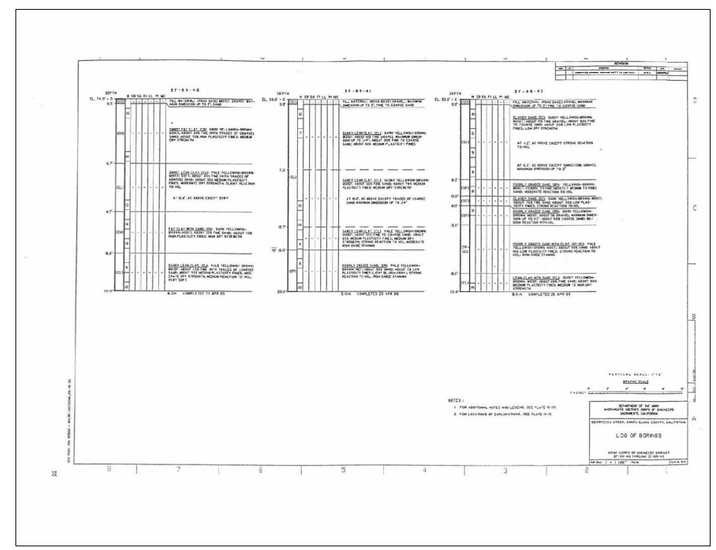

US Army Corps of Engineers
San Francisco District
1455 Market Street
San Francisco, CA 94103

TETRA TECH
17885 VON KARMAN AVE.,
SUITE 500
IRVINE, CA 92614
Phone: (949) 809-5000

Mark	Description	Date	Appr.

DESIGNED BY: AMT | CHECKED BY: YHC | DRAWN BY: AWG
DATE: 8-4-2016 | SHEET NO. 70 of 71 | DRAWING NO.

SUBMITTED:
Chief, Civil Design Section

APPROVAL RECOMMENDED:
Chief, Engineering Branch

APPROVED:
Chief, Engineering & Technical Services

PREPARED UNDER THE DIRECTION OF
JOHN C. MORROW
LT. COLONEL, C.E., DISTRICT COMMANDER

SANTA CLARA COUNTY, CALIFORNIA
UPPER BERRYESSA CREEK FLOOD RISK MANAGEMENT PROJECT

GEOTECHNICAL BORING LOG

Sheet reference number
B-109

REGISTERED PROFESSIONAL ENGINEER
ARIC TORREYSON
NO. 66068
EXP. 6-30-18
CIVIL
STATE OF CALIFORNIA

P:\Watr\T31331 Berryessa Design SCVWD\11 Design\01 Final Design\Sheets\ B-109.dwg 03 Aug 2016 - 10:05am

CONFORMED DRAWING

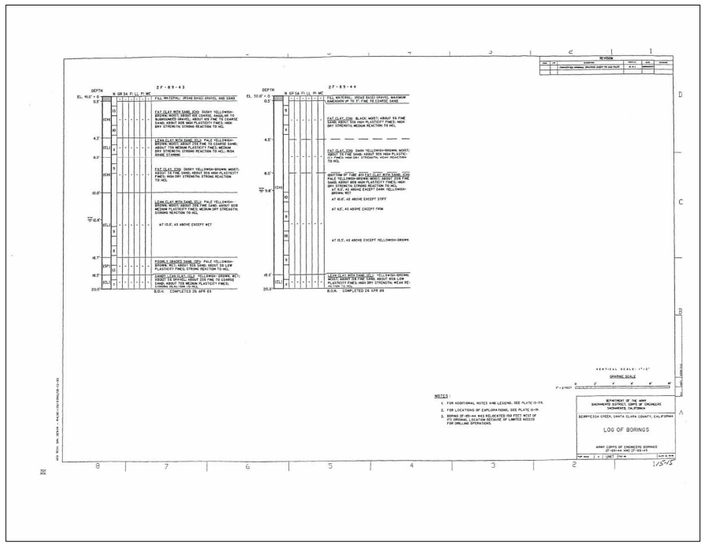

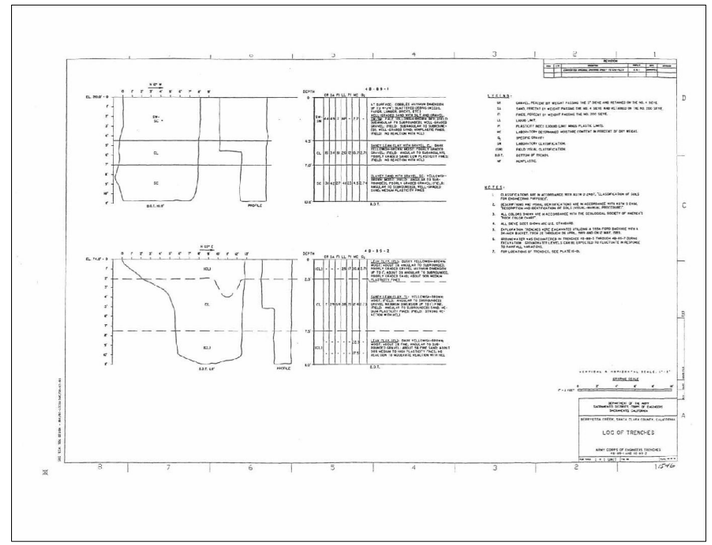

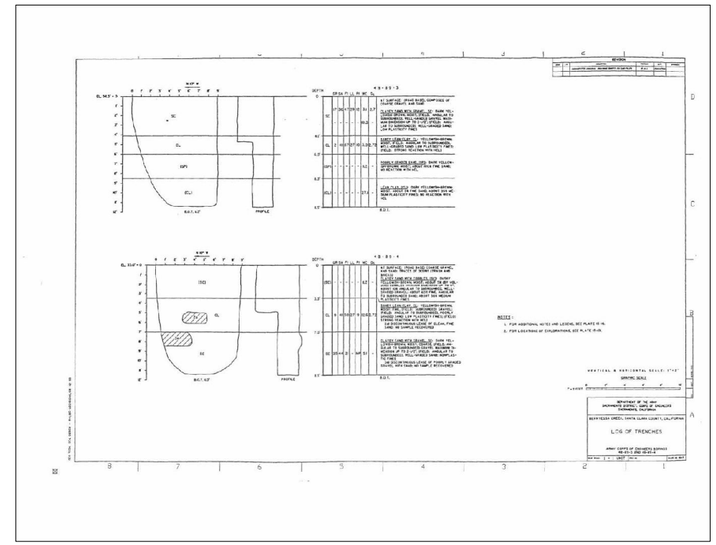

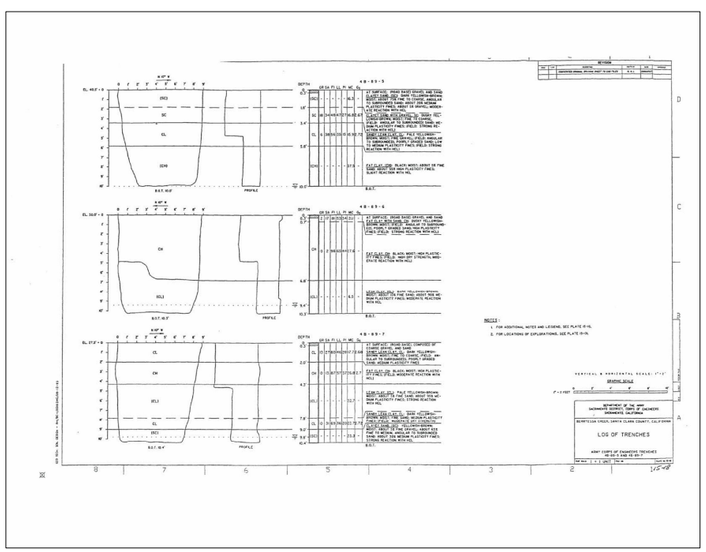

US Army Corps of Engineers
San Francisco District
1455 Market Street
San Francisco, CA 94103

TETRA TECH
17885 VON KARMAN AVE.,
SUITE 500
IRVINE, CA 92614
Phone: (949) 809-5000

Mark	Description	Date	Appr.

DESIGNED BY: AMT | CHECKED BY: YHC | DRAWN BY: AWG
DATE: 8-4-2016 | SHEET NO. 71 of 71 | DRAWING NO.

SUBMITTED:
Chief, Civil Design Section
APPROVAL RECOMMENDED:
Chief, Engineering Branch
APPROVED:
Chief, Engineering & Technical Services

PREPARED UNDER THE DIRECTION OF
JOHN C. MORROW
LT. COLONEL, C.E., DISTRICT COMMANDER

SANTA CLARA COUNTY, CALIFORNIA
UPPER BERRYESSA CREEK FLOOD RISK MANAGEMENT PROJECT

GEOTECHNICAL BORING LOG

Sheet reference number
B-110

REGISTERED PROFESSIONAL ENGINEER
ARIC TORREYSON
NO. 66068
EXP. 6-30-18
CIVIL
STATE OF CALIFORNIA

P:\Watr\T31331 Berryessa Design SCVWD\11 Design\01 Final Design\Sheets\ B-110.dwg 03 Aug 2016 - 10:06am